APRIL 1995

ABONNEMENT GME

REF. 1 No XM 122-1/4

CANCELS AND REPLACES

XUD 11 ENGINE

● VALVE TIMING

Removing - Refitting the timing belt (on the vehicle)

MAN 058931

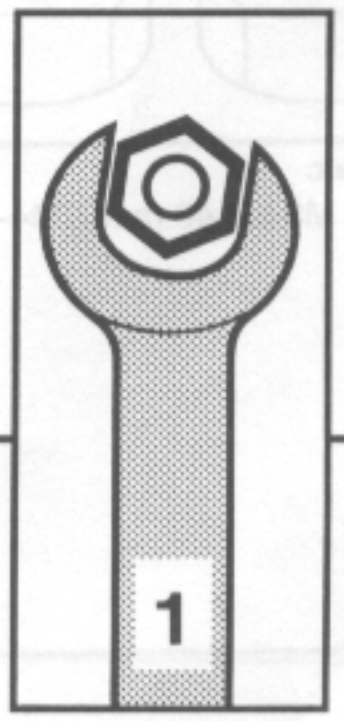

GB

AUTOMOBILES CITROËN
DIRECTION COMMERCE EUROPE
DOCUMENTATION APRÈS VENTE

REMOVING – REFITTING : TIMING BELT (ON THE VEHICLE)

1 – RECOMMENDED TOOLS

XU 7004–T engine overhaul tool box.

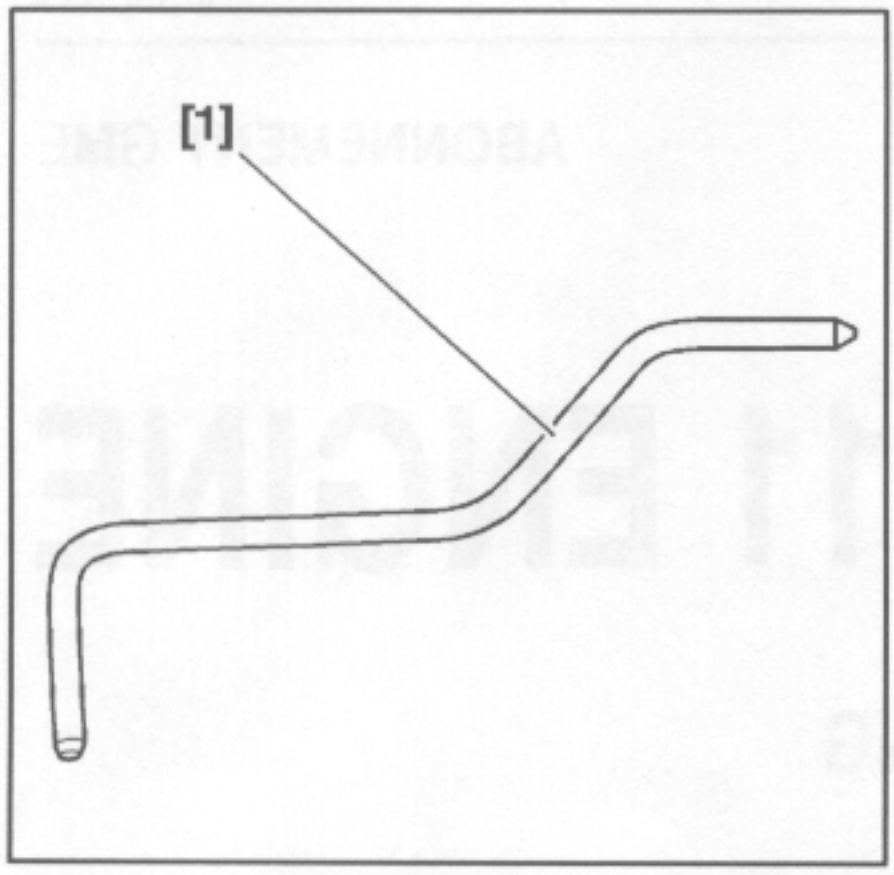

Fig : E5–P01HC

[1] flywheel setting rod 7014–T.J (tool box XU 7004–T).

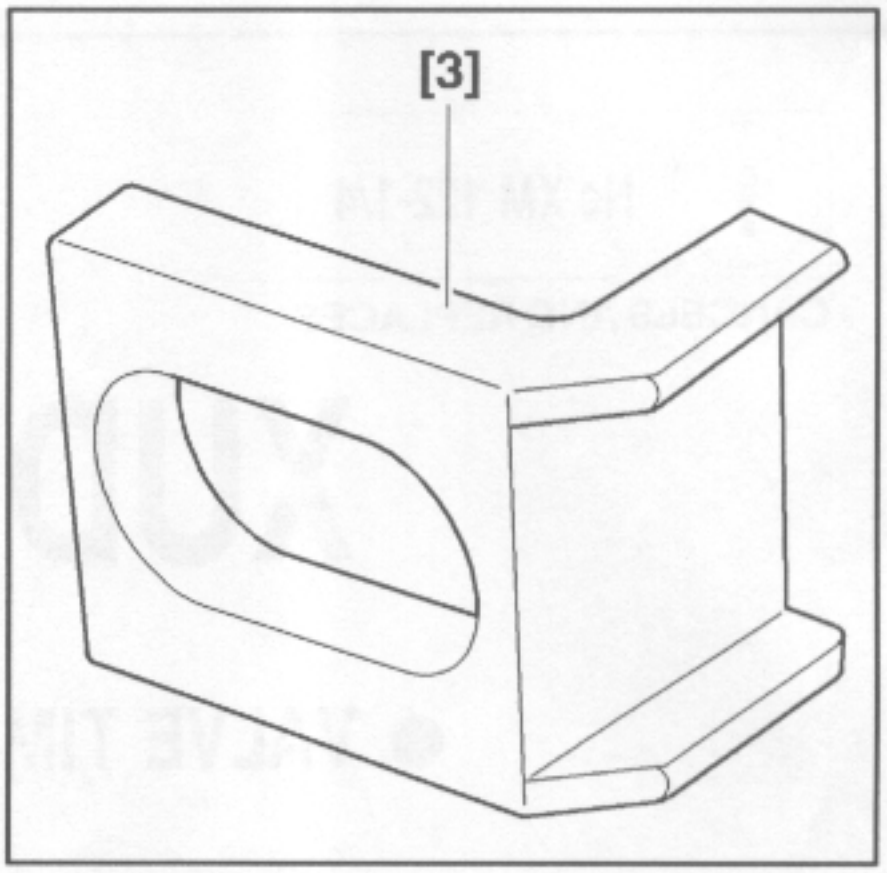

Fig : E5–P09LC

[3] toothed sector for locking the engine flywheel 9044–T (tool box XU 7004–T).

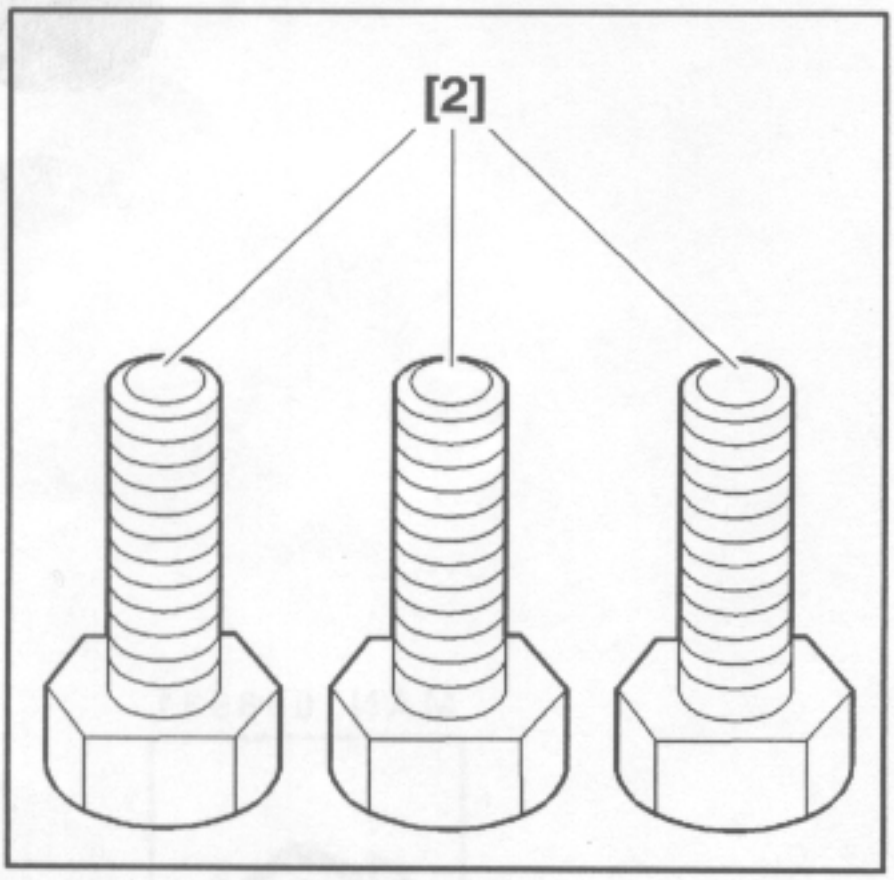

Fig : E5–P09MC

[2] bolts M8 L = 40 mm 7004–T (tool box XU 7004–T).

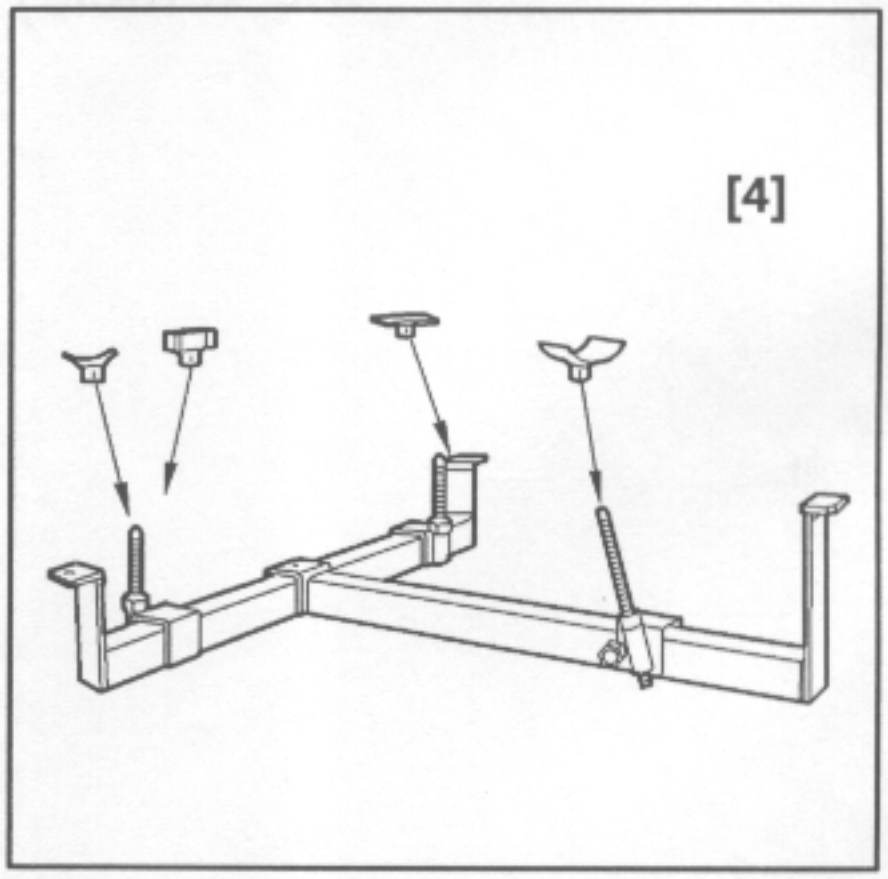

Fig : E5–P087C

[4] engine support 9026–T.

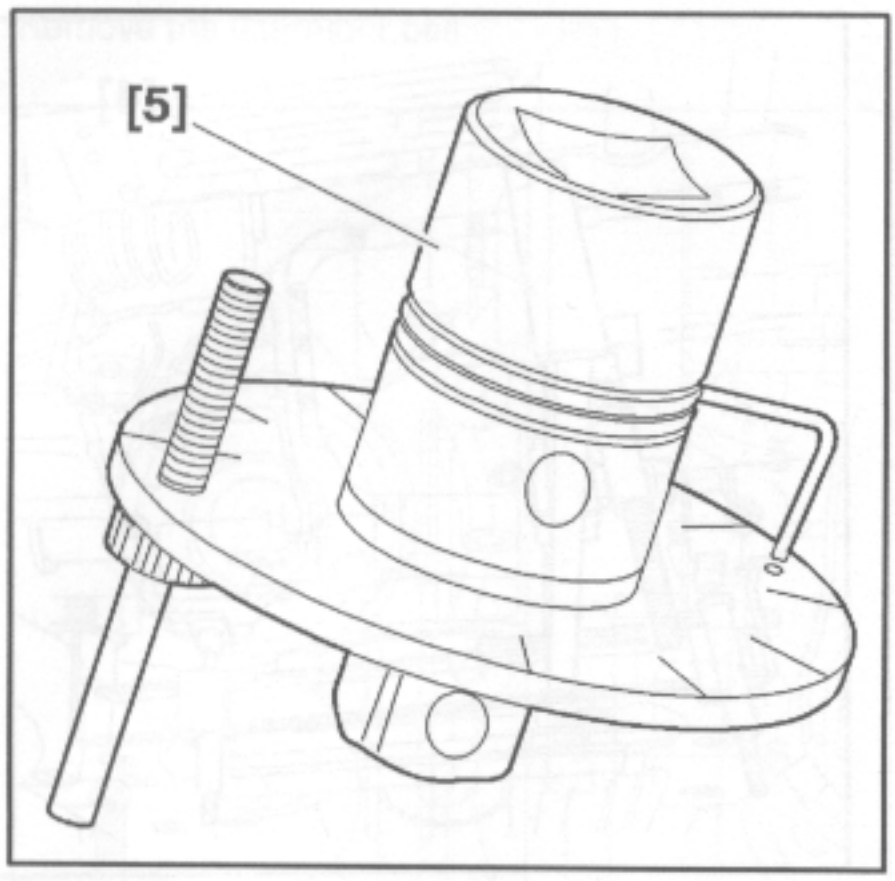

Fig : E5-P04UC
[5] adaptor for angular tightening 4069-T.

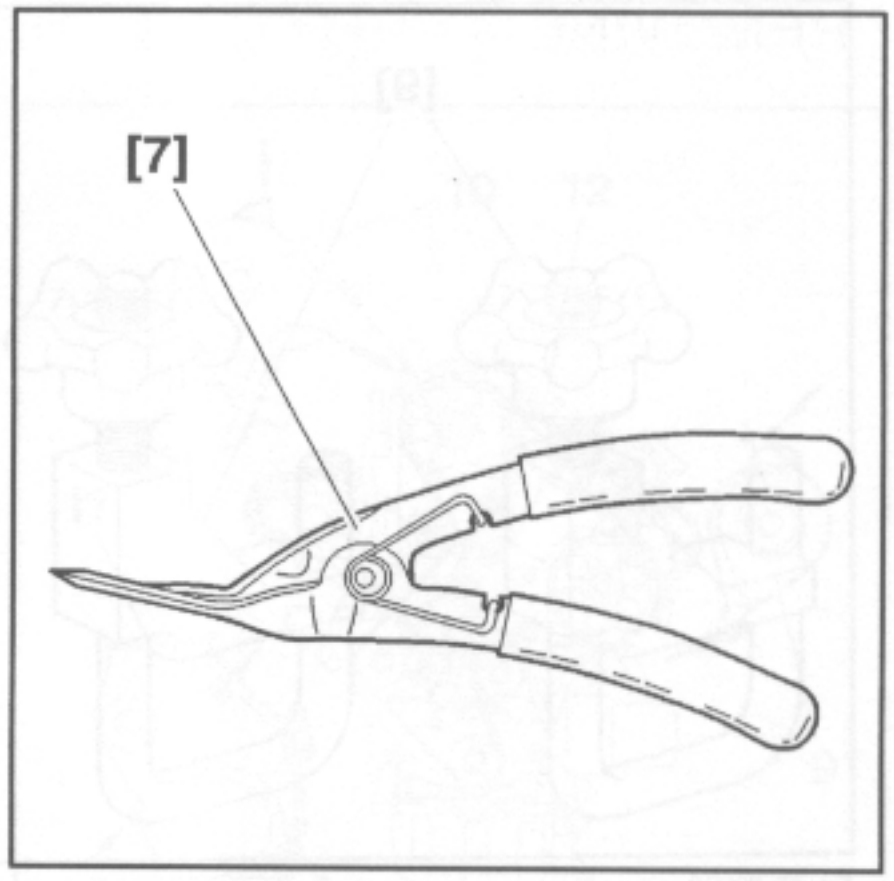

Fig : E5-P09NC
[7] pliers 7504-T for removing plastic clips.

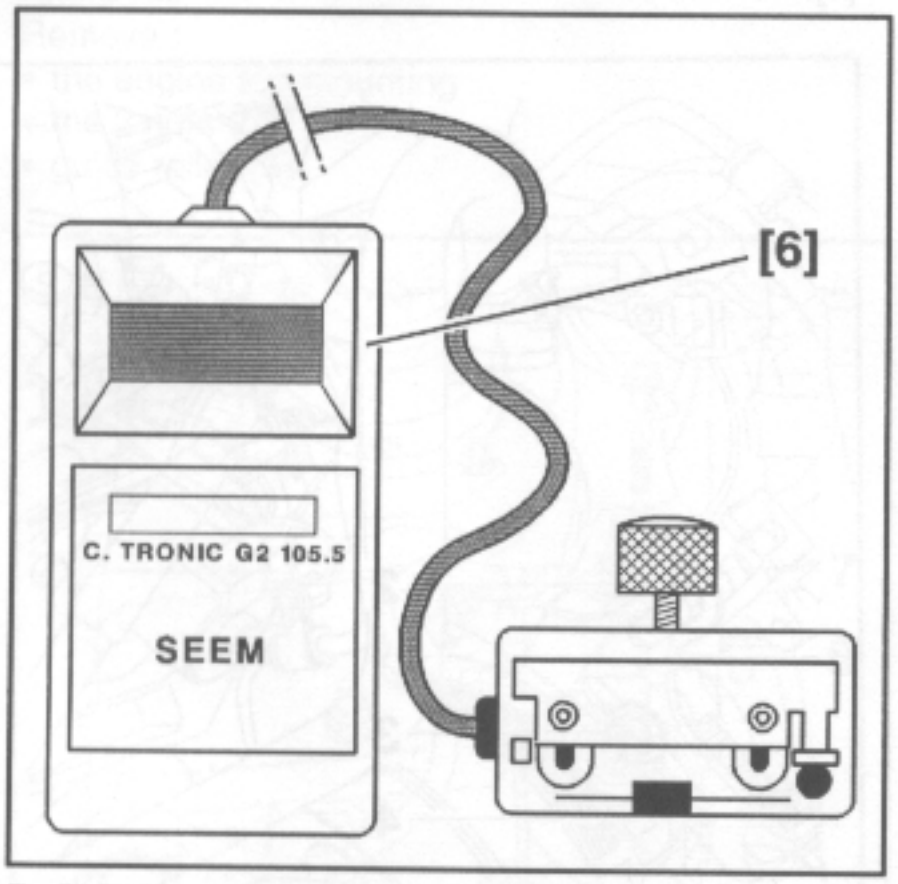

Fig : E5-P03SC
[6] belt tension measuring instrument with digital read out (SEEM) (4122-T) (C.TRONIC 105.5).

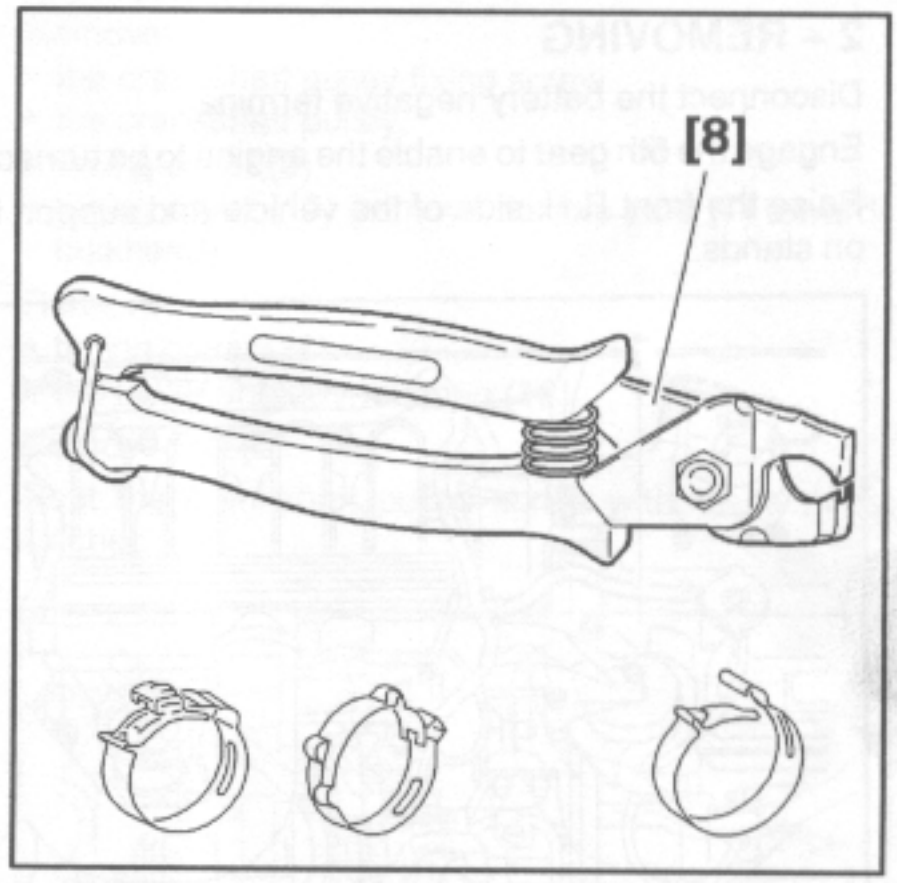

Fig : E5-P09PC
[8] clic clip pliers 4145-T.

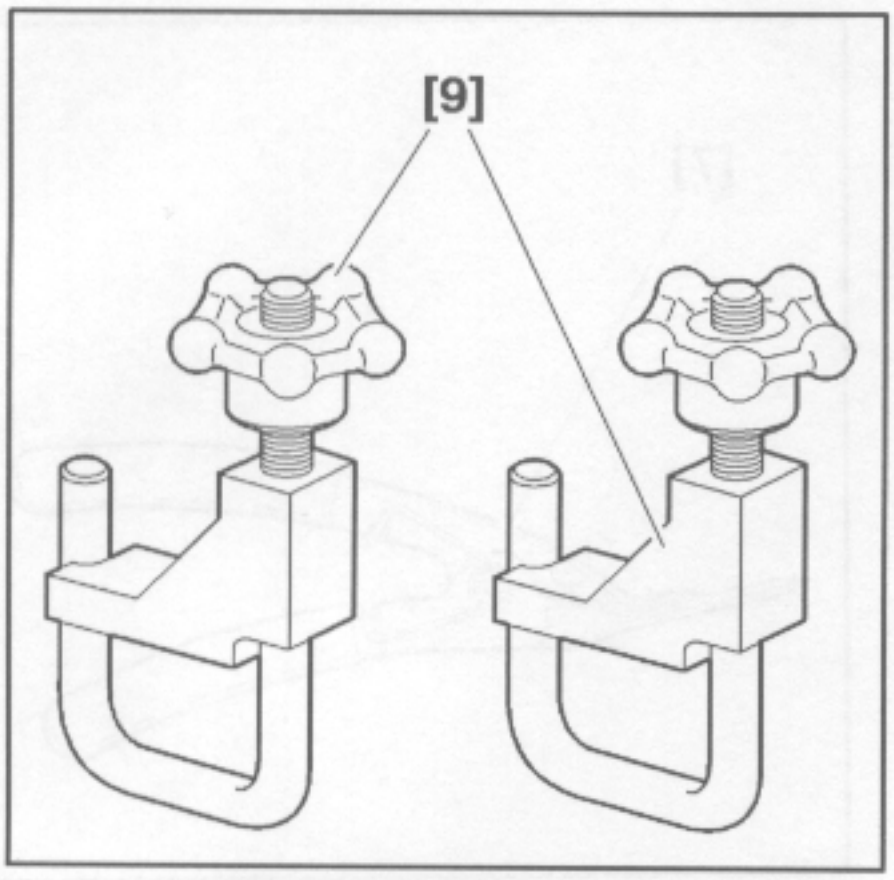

Fig : E5-P09QC

[9] pair of hose clamps (2) 4153-T.

2 - REMOVING

Disconnect the battery negative terminal.

Engage the 5th gear to enable the engine to be turned.

Raise the front R.H. side of the vehicle and support it on stands.

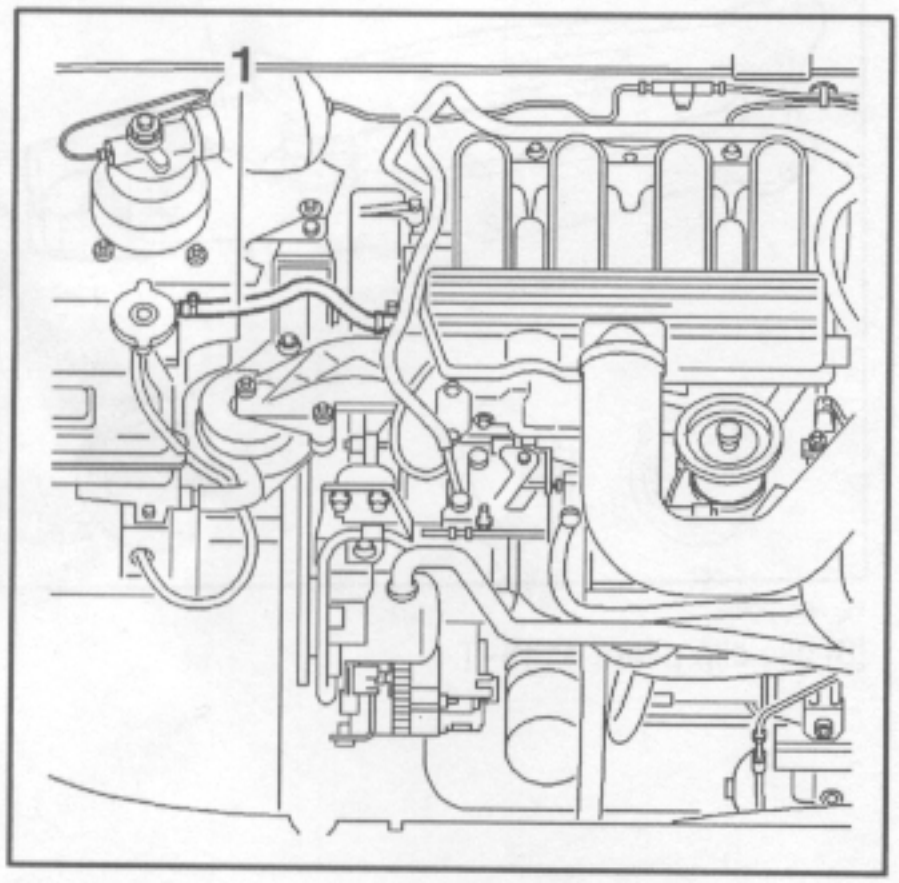

Fig : B1EP042C

Remove :

- the RH front road wheel
- the R.H. front mud shield ; by means of tool [7]
- the sound insulator from under the engine (depending on the version)
- calculator box (depending on the version)

(remove calculator and electrical harness).

Position the tool [9] onto the flexible hose (1).

Uncouple the connection hose.

Remove the diesel fuel pipes (if necessary).

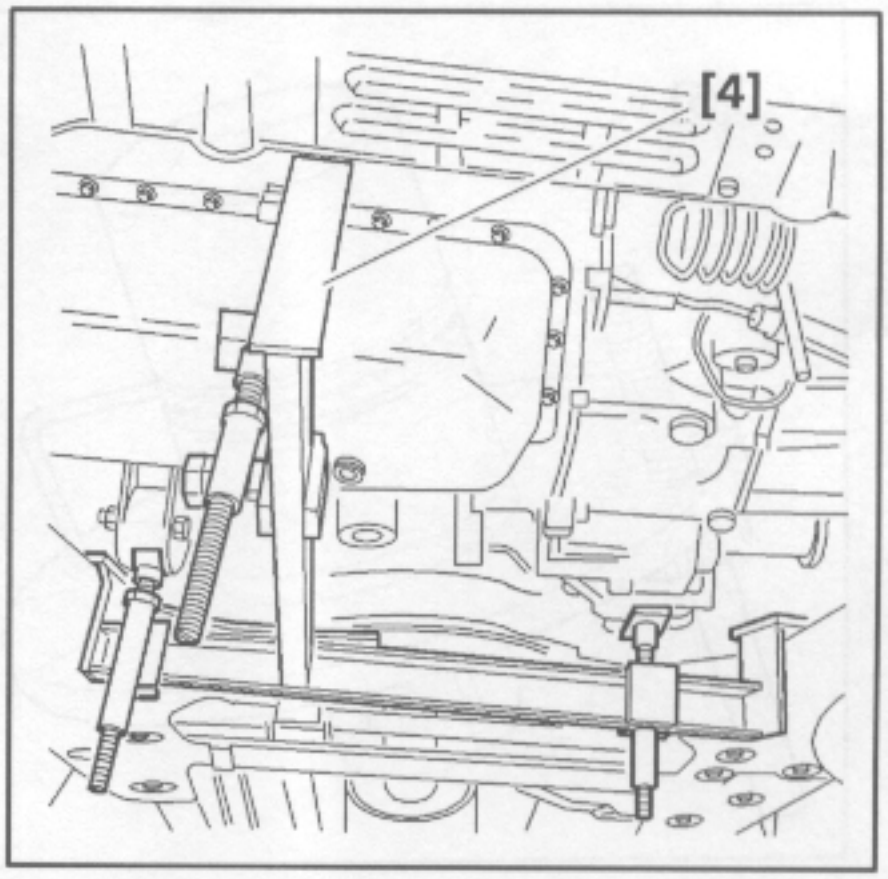

Fig : B1EP043C

Support the power unit assembly ; by means of tool [4].

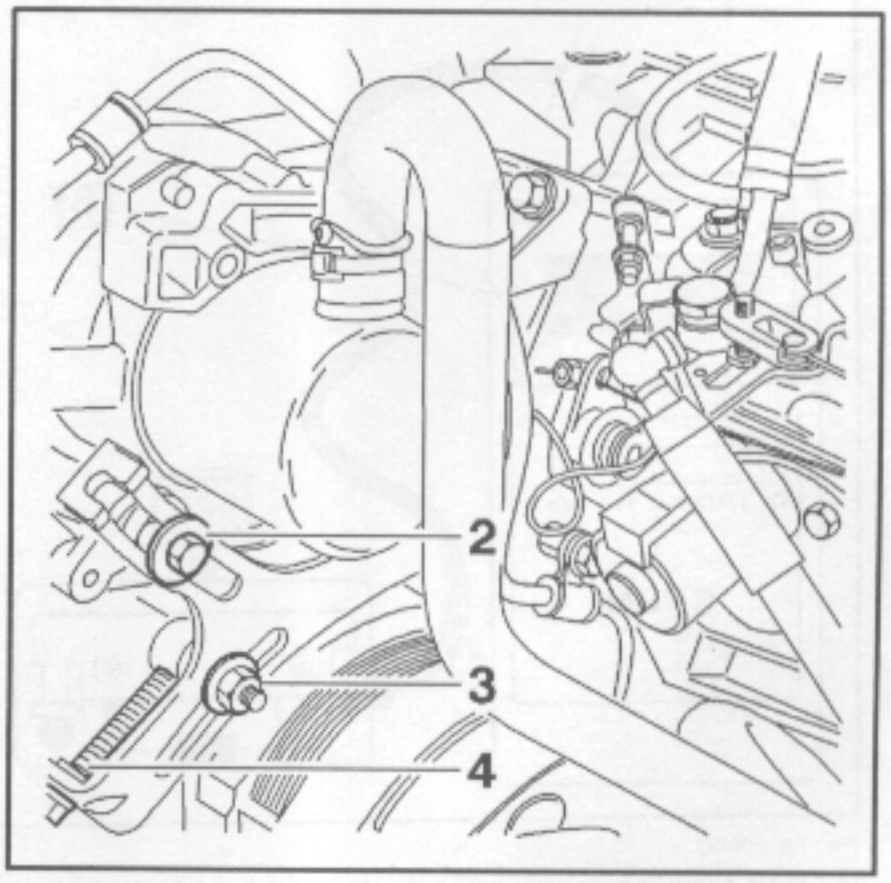

Fig : B1EP044C

Slacken screw (2).

Remove belt of high pressure pump.

Slacken the nut (3) and the bolt (4).

Remove the alternator belt.

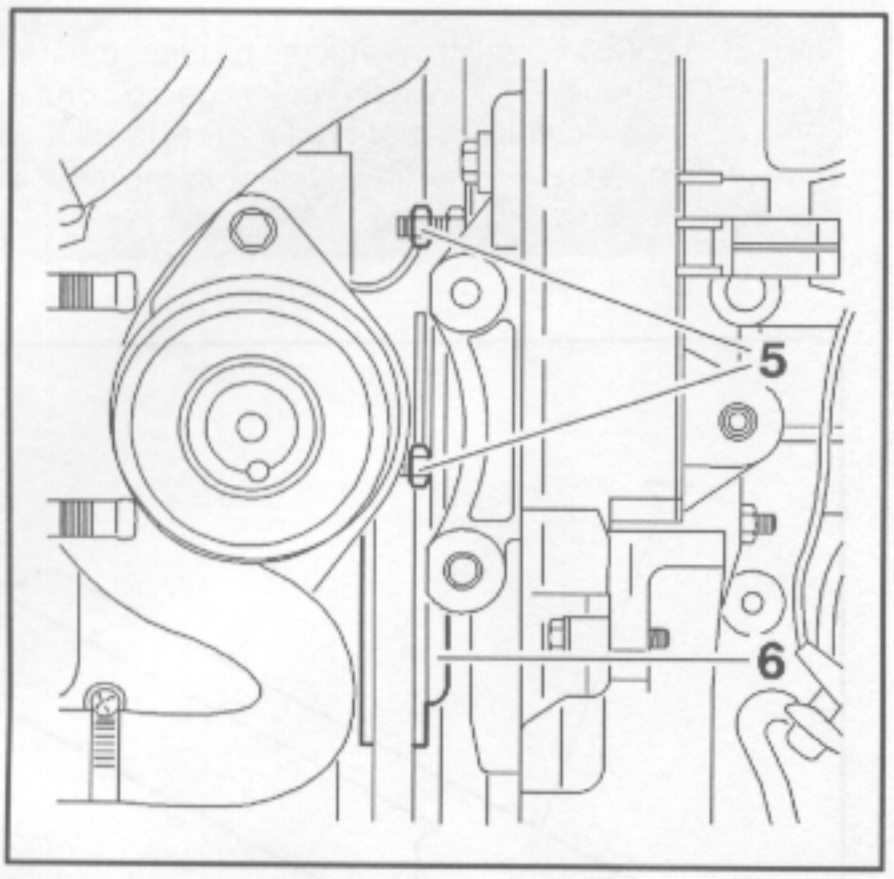

Fig : B1EP045C

Remove :
- the engine top mounting
- the 2 nuts (5)
- guide roller (6)

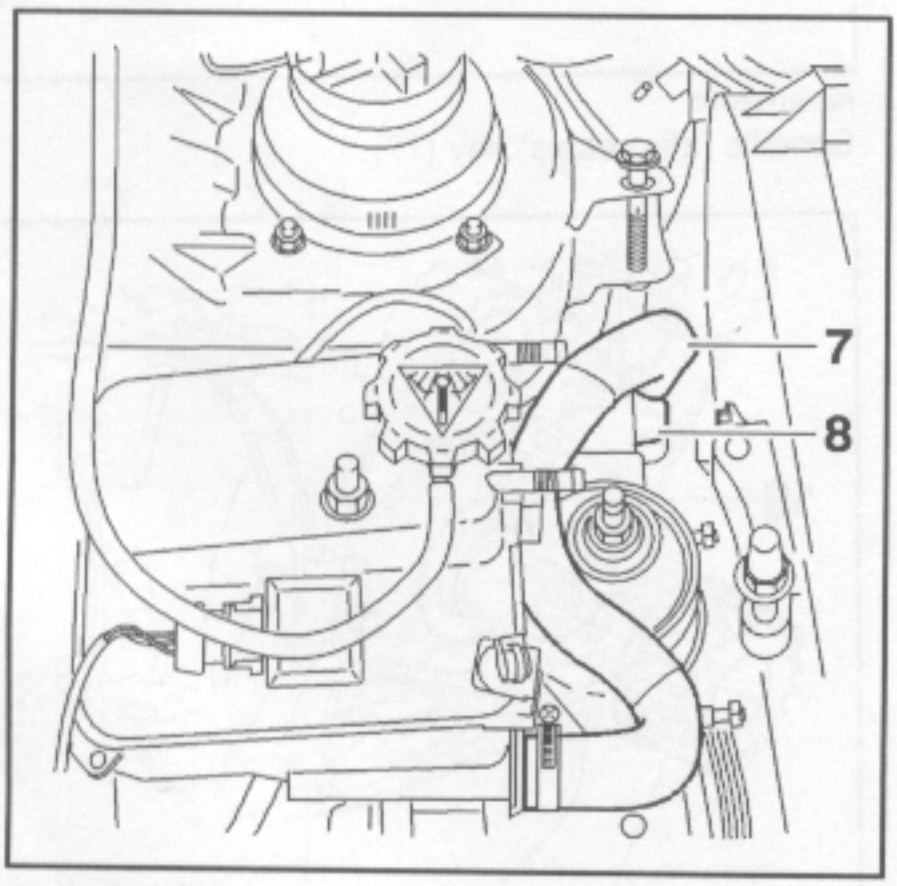

Fig : B1EP046C

Remove flexible pipe (7) from clamp (8).

Remove the clutch housing bottom closing plate.

Lock the flywheel by means of tool [3].

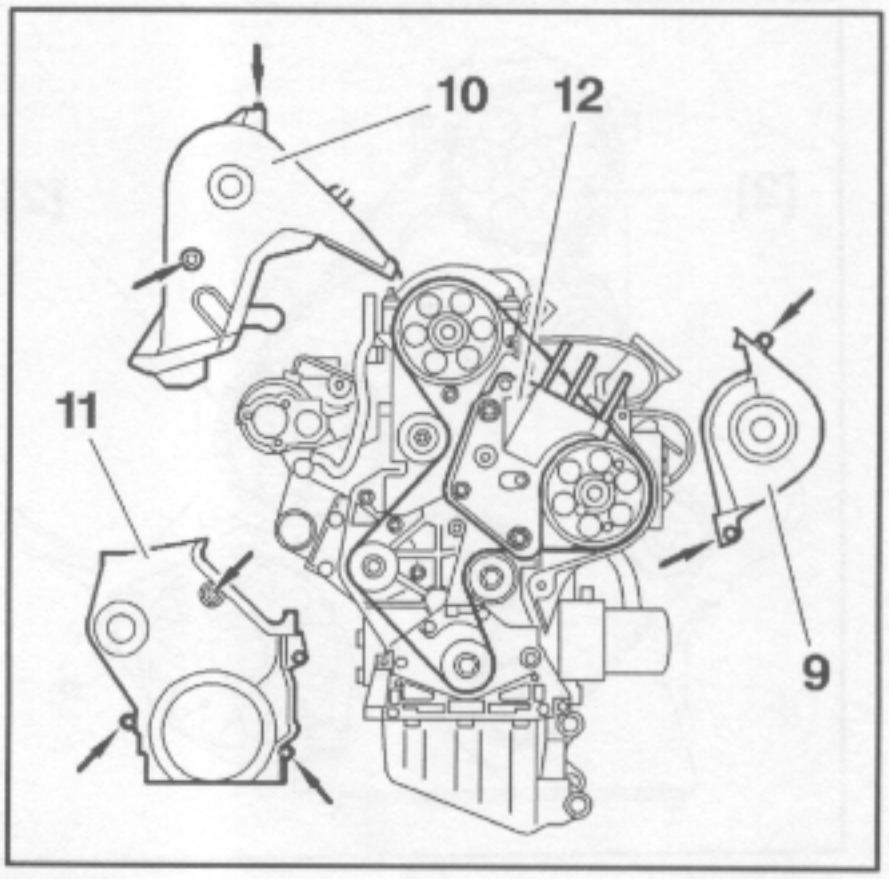

Fig : B1EP047C

Remove :
- the crankshaft pulley fixing screw
- the crankshaft pulley
- timing cover (9)
- timing cover (10) (remove flexible pipe (7) towards bulkhead)

Remove :
- timing cover (11)
- the lower engine mounting (12)

Remove tool [3].

Refit the crankshaft pulley screw without its thrust washer.

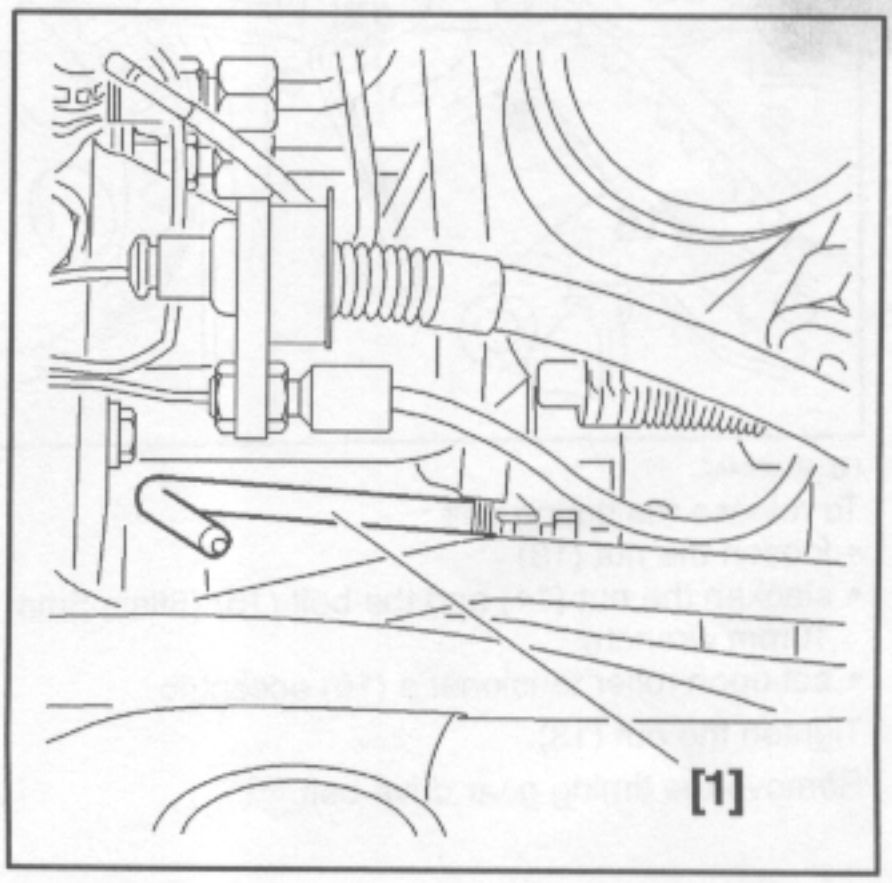

Fig : B1EP048C

Peg the flywheel with tool [1].

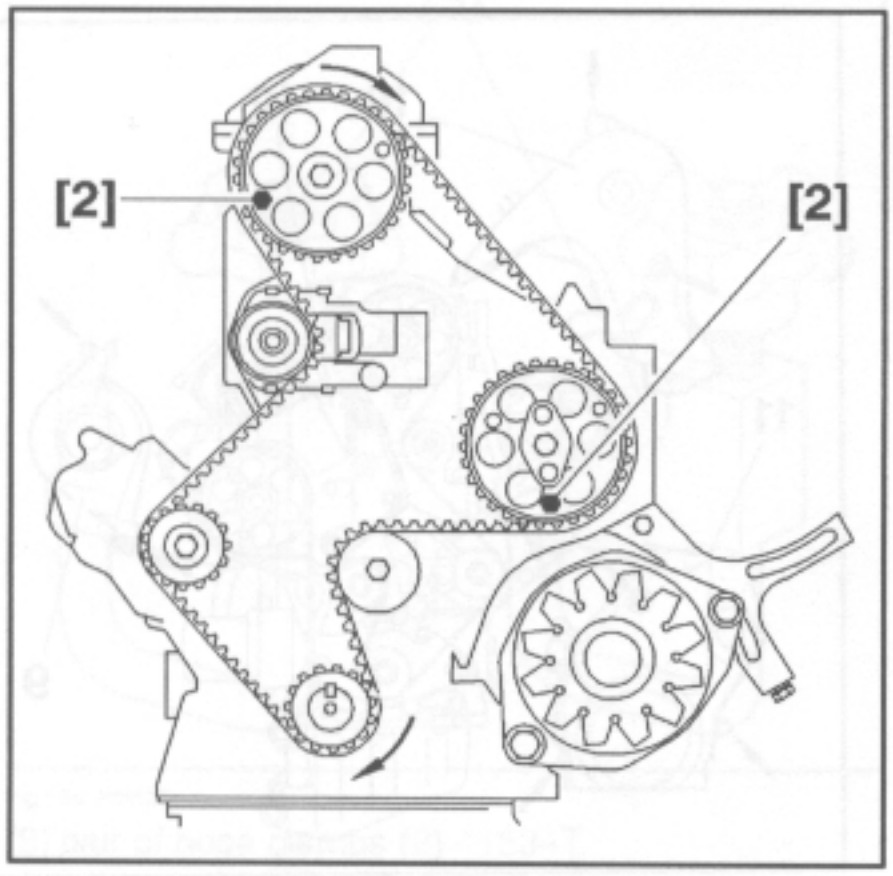

Fig : B1EP049C

Peg by means of tool [2] :
- the camshaft gear
- pinion of injection pump

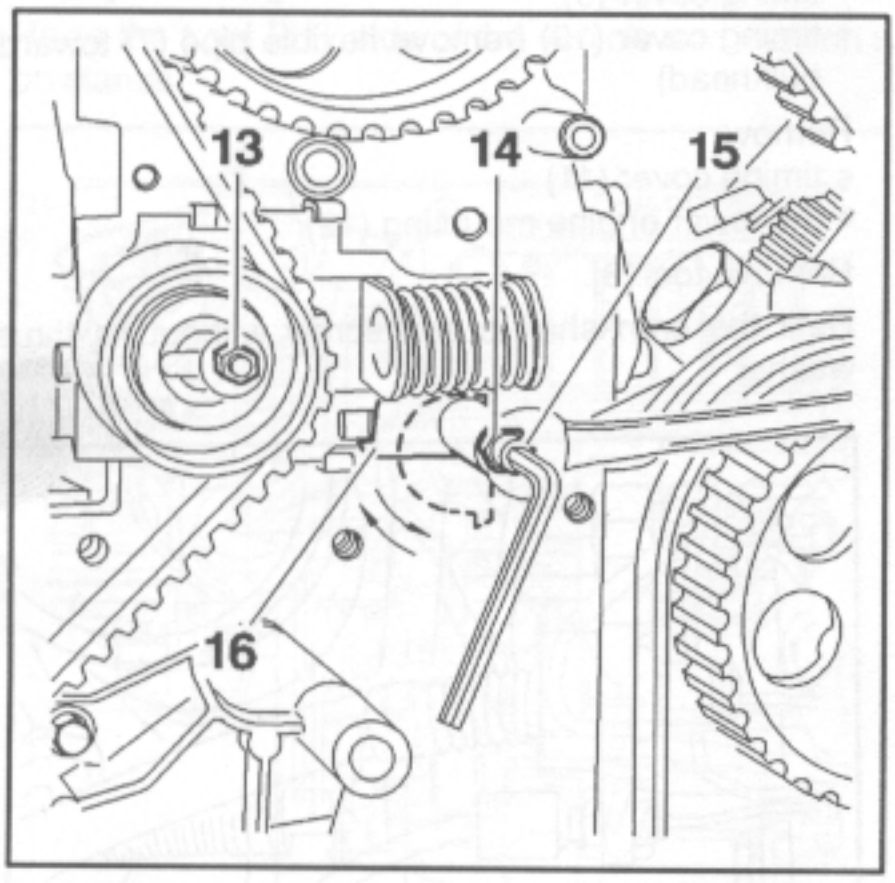

Fig : B1EP04AC

To release the timing belt :
- loosen the nut (13)
- slacken the nut (14) and the bolt (15) (6flats 5mm ; 10mm wrench)
- act upon roller tensioner's (16) eccentric

Tighten the nut (13).

Remove the timing gear drive belt.

3 – REFITTING

IMPERATIVE : For all the vehicles produced before the RPO number 6176, when work is being done on one of the following components : the crankshaft pulley fixing screw ; the timing belt, fit the specific "after sales" key (17).

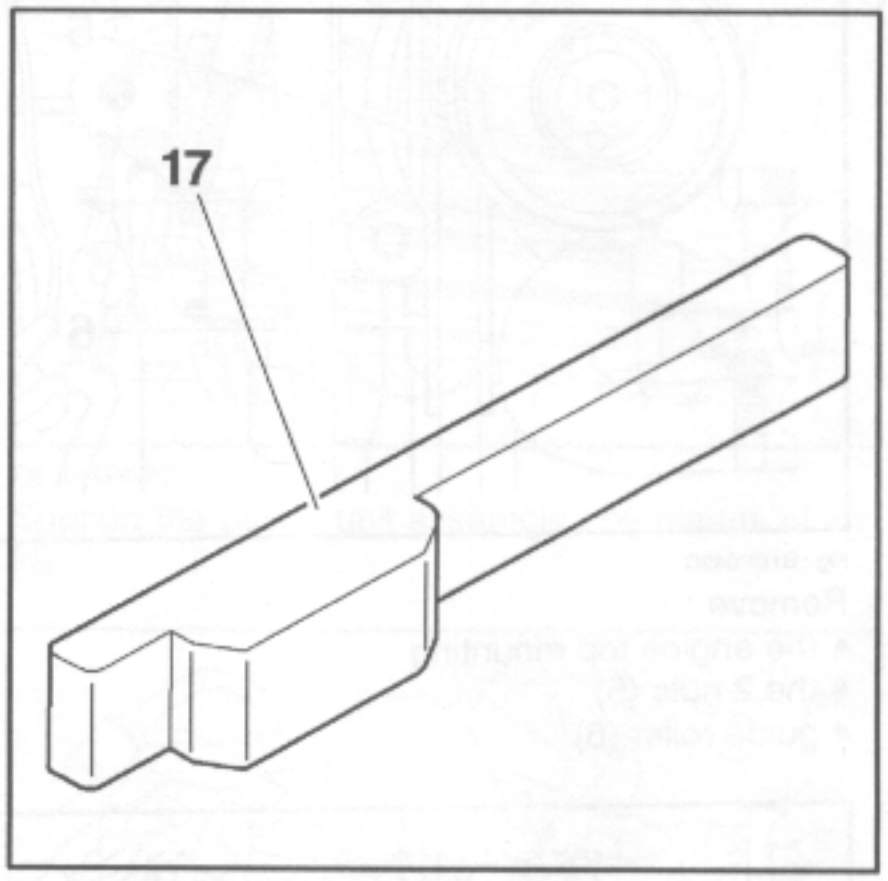

Fig : B1EP04BC

Specific "after sales" key (17).

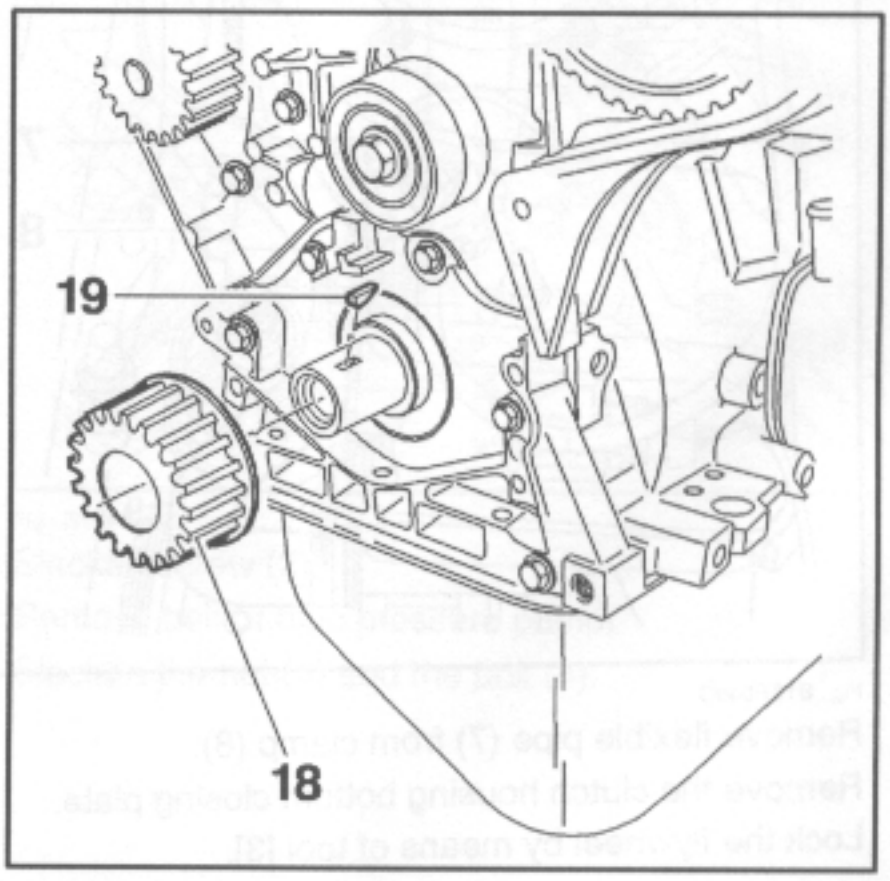

Fig : B1EP04CC

Remove :
- crankshaft sprocket (18)
- the key (19)

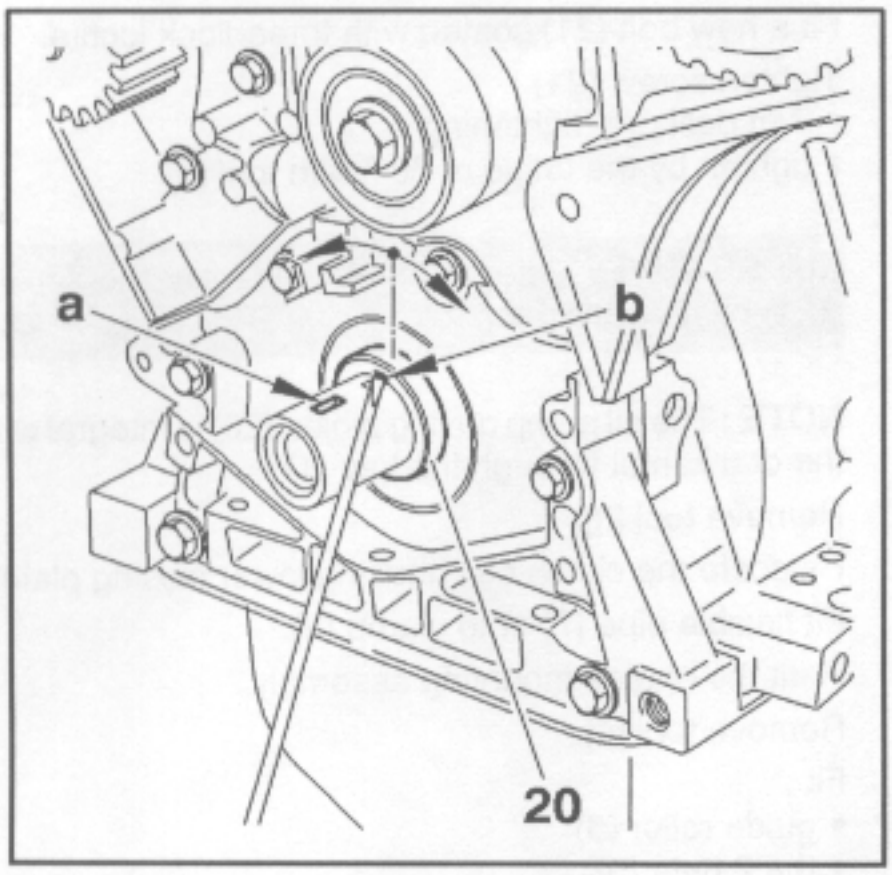

Fig : B1EP04DC

ATTENTION : Do not damage the seal lip.

Align the oil pump pinion keying groove "b" with the crankshaft keying groove "20" (a) (using a screwdriver).

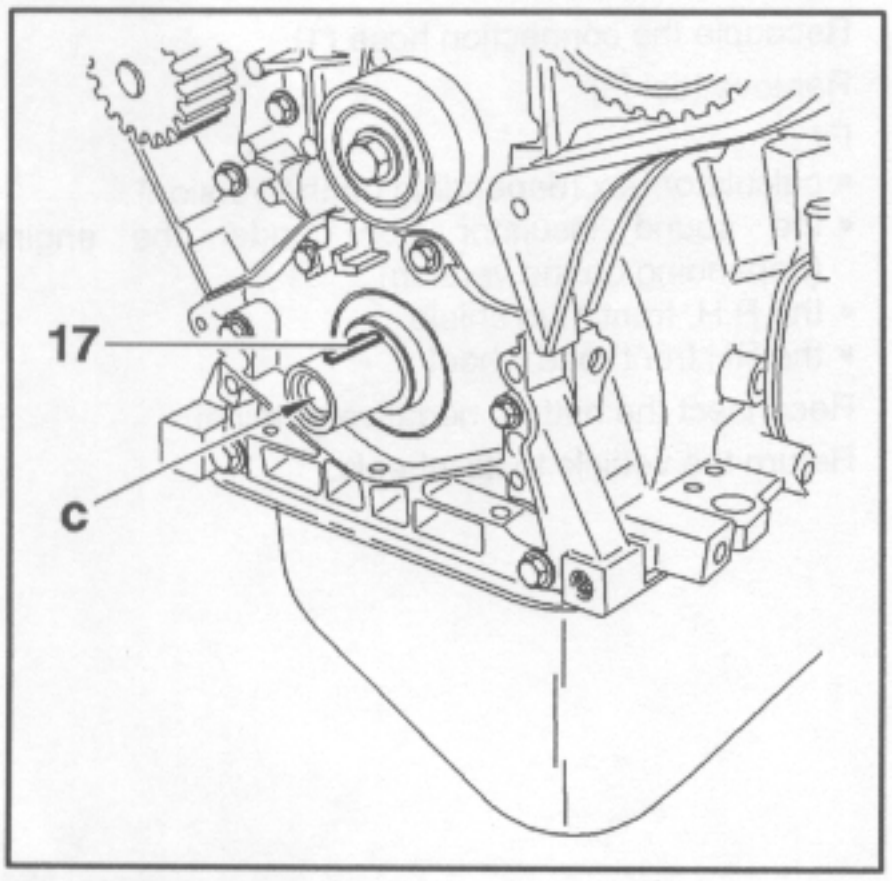

Fig : B1EP04EC

Fit key (17).

Clean the tapping "c" by means of a screw tap M 14x150.

Refit the gear (18).

Install the timing belt over :
- the injection pump pinion ; belt run without slack
- the roller tensioner (*)
- the crankshaft pinion
- the water pump drive pinion

Install the timing belt over :
- the camshaft pinion (*)
- the roller tensioner (*)

NOTE : (*) partially engage belt.

Put belt on-line onto the various pinions.

Remove tools [1] and [2].

Loosen the nut (13).

Turn the crankshaft two turns in the normal direction of rotation.

Check if the crankshaft is in pegging position.

NOTE : Do not refit pegs [1] and [2].

IMPERATIVE : Never rotate the crankshaft backward.

Tighten nut (13) to 1 m.daN.

Turn the crankshaft two turns in the normal direction of rotation.

Check if the crankshaft is in pegging position.

IMPERATIVE : Never rotate the crankshaft backward.

Loosen the nut (13) by 1 turn.

Tighten nut (13) to 1 m.daN.

Tighten nut (14) and bolt (15), to 1 m.daN.

Fit tools [1] and [2].

ATTENTION : If one of the rods cannot be fitted, repeat the belt fitting operations.

Remove tools [1] and [2].

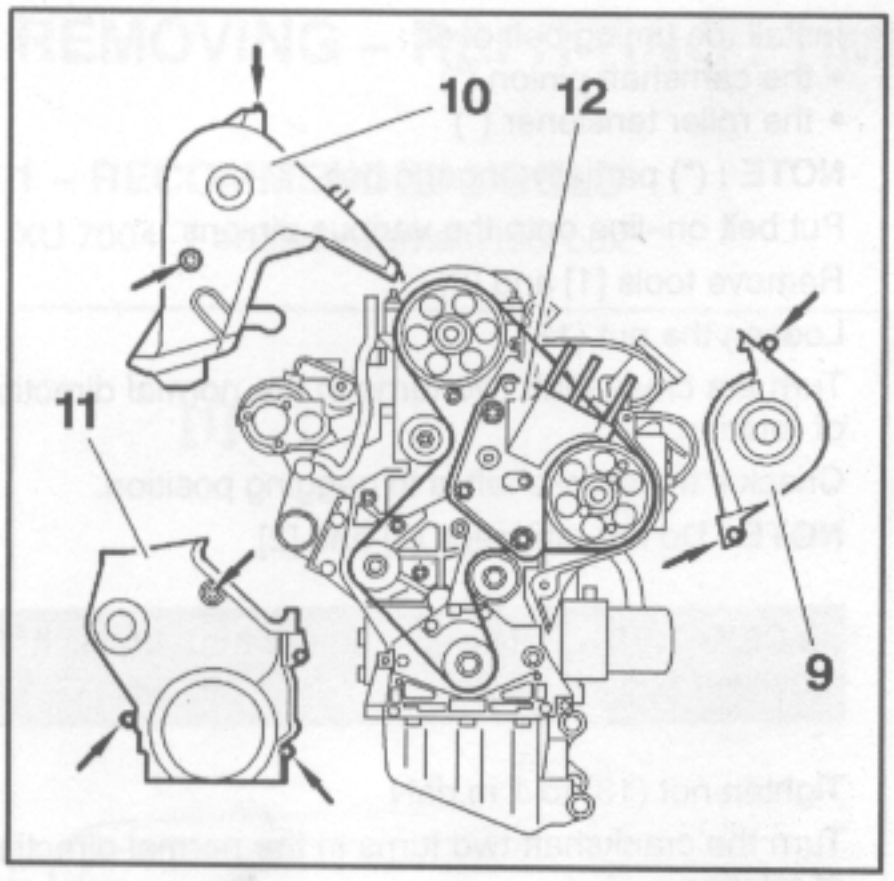

Fig : B1EP047C

Fit :
- the lower engine mounting (12)
- timing cover (11)
- timing cover (10) (remove flexible pipe (7) towards bulkhead)
- timing cover (9)

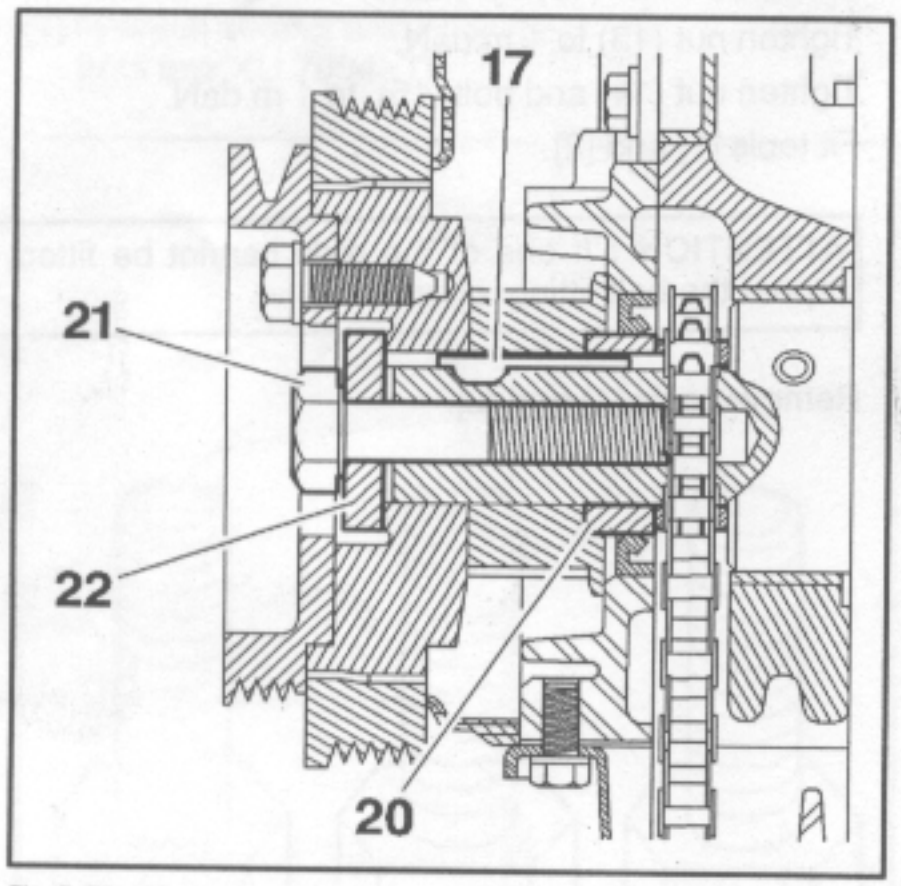

Fig : B1EP04FC

Fit :
- tool [3]
- the crankshaft pulley
- place the new washer (22)

Fit a new bolt (21) coated with threadlock loctite.

Tighten screw (21) :
- 7 m.daN pre-tightening
- tighten by the angle of 60 ° with tool [5]

IMPERATIVE : After tightening, identify the screw (21) by a yellow paint marking.

NOTE : The oil pump driving pinion (20) is integral with the crankshaft through the key (17).

Remove tool [3].

Relocate the clutch bell housing lower closing plate.

Fit flexible pipe (7) onto clamp (8).

Refit the engine mounting assembly.

Remove tool [4].

Fit :
- guide roller (6)
- the 2 nuts (5)
- the alternator belt

Tension the belt by acting on the screw (4) (see the relevant operation).

Tighten nut (3).

Install belt of high pressure pump.

Tighten the belt (see the relevant operation).

Tighten screw (2).

Recouple the connection hose (1).

Remove tool [9].

Fit :
- calculator box (depending on the version)
- the sound insulator from under the engine (depending on the version)
- the R.H. front mud shield
- the RH front road wheel

Reconnect the battery negative terminal.

Return the vehicle to its wheels.