23rd DECEMBER 1994

ABONNEMENT GME

REF. 1 N° XM 112-00/1

DK5 ENGINE

● CYLINDERHEAD

MAN 058931

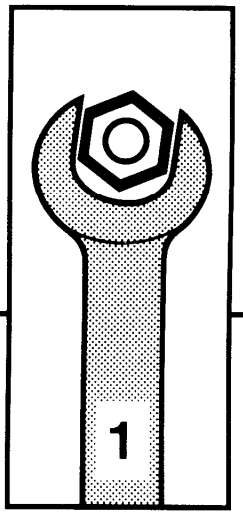

GB

AUTOMOBILES CITROËN
DIRECTION COMMERCE EUROPE
DOCUMENTATION APRÈS VENTE

CYLINDERHEAD

CYLINDER HEAD TIGHTENING

1 – RECOMMENDED TOOLS

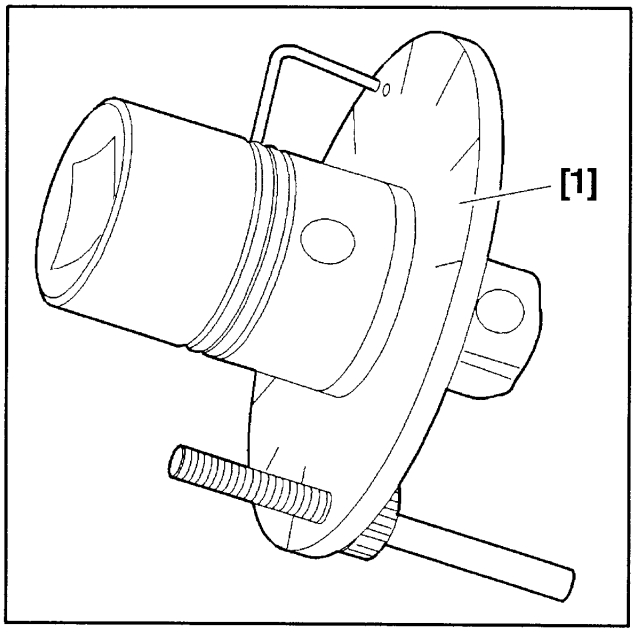

Fig : B1DP001C

[1] adaptor for angular tightening.

[1]	4069–T

2 – CHECKING CYLINDER HEAD BOLTS BEFORE RE–USE

IMPERATIVE : It is necessary to check the length of the cylinderhead bolts before re–using them.

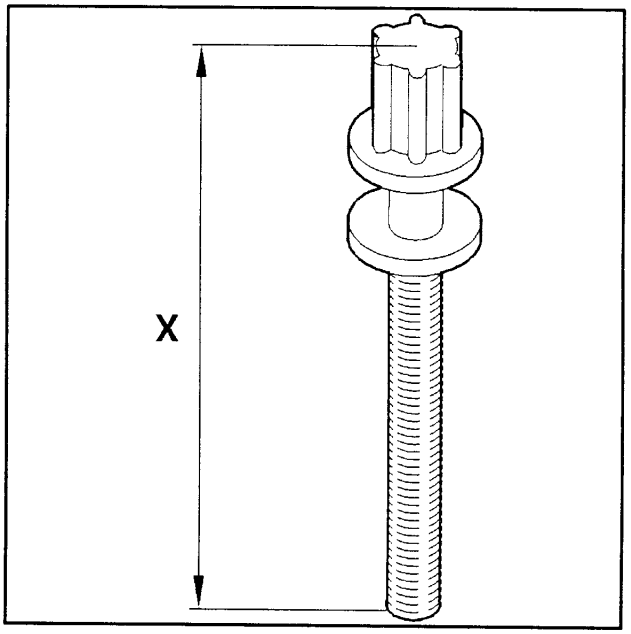

Fig : B1DP00QC

X overall length of the screw.

Engine code	screw Ø	X
DK5	10x150	162.5 mm
	12x150	153.5 mm

IMPERATIVE : Use new screws if their lengths exceed (X).

3 - PRIOR CONDITIONS

Clean the joint faces.

(do not use a sharp or abrasive tool).

Check the flatness of the cylinderhead (0,03 mm).

Clean out the threads of the cylinder block head screws with a tap (10x150 and 12x150 taps).

The cylinderhead gasket will be fitted dry.

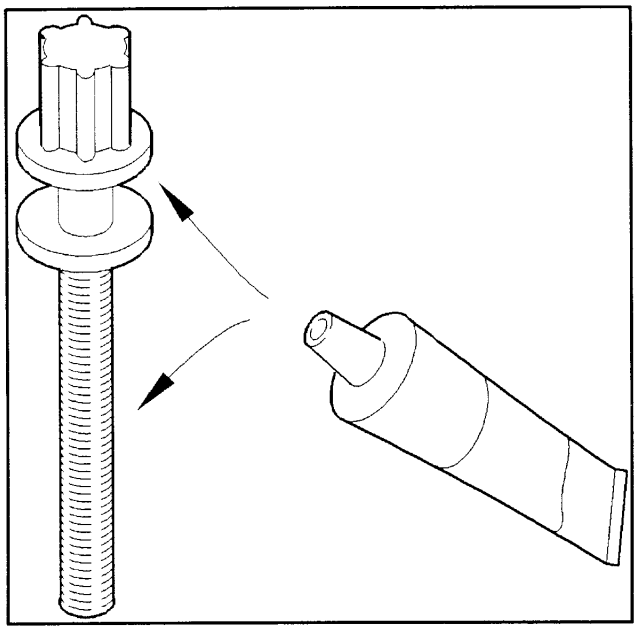

Fig : B1DP00RC

Smear the threads and contact faces under heads of the bolts with MOLYKOTE G. RAPID PLUS grease.

4 - CYLINDER HEAD TIGHTENING

IMPERATIVE : Tighten the cylinderhead bolts in the order indicated.

4.1 - Generality

This tightening method avoids the need to warm up the engine before the final tightening of the cylinderhead.

No retightening of the cylinderhead is required at the first service.

4.2 - Tightening sequence

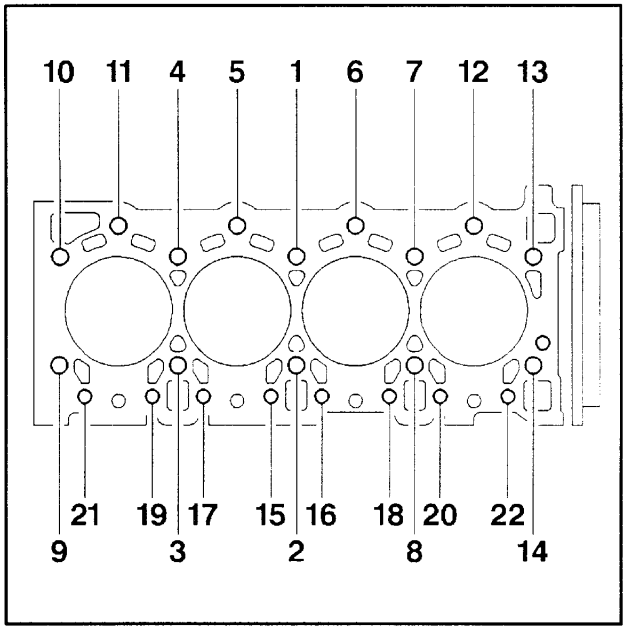

Fig : B1BP03XC

This operation is performed in 2 stages.

First stage :

- proceed bolt by bolt in the order shown (1 to 14)
- tightening of screws 12x150 to 5 mda.N
- proceed bolt by bolt in the order shown (15 to 22)
- tightening of screws 10x150 to 3.5 mda.N

Second stage :

- proceed bolt by bolt in the order shown (1 to 22)
- angular tightening of 120° ± 5° utilising tool [1]

REMOVING – REFITTING THE CYLINDER HEAD (IN THE VEHICLE)

1 – RECOMMENDED TOOLS

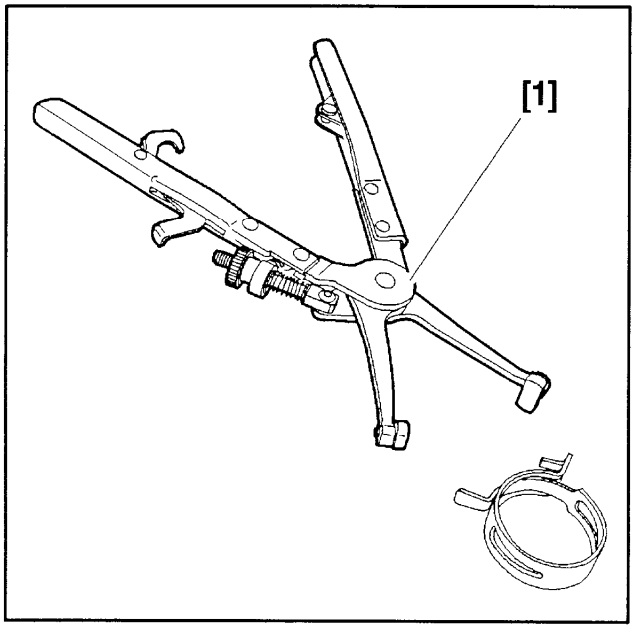

Fig : E5-P059C

[1] hose clamp (9029-T).

Additional tools :
- setting rod 5711-TQ (tool box 5711-T)
- spanner 5711-TR (tool box 5711-T)
- tensioning spanner 5711-TS (tool box 5711-T)
- flywheel setting rod 7014-TJ (tool box 7004-T)
- camshaft gear wheel setting rod 5711-TA (tool box 5711-T)
- injection pump setting rod 5711-TB (tool box 5711-T)
- belt tension measuring instrument 4099-T - 4122-T
- LHM reservoir/filter assembly cover 9004-T
- filling cylinder 4520-T
- set of levers to free cylinderhead 149-T (tool box 4067-T)

2 – REMOVAL

Raise and support the vehicle, with the wheels hanging free.

Unclip the battery trim cover :
- 2 attachment points, front side end
- 1 attachment point marked by an arrow towards the air filter (using a screwdriver)

Remove :
- the battery
- the protective plate under the engine
- the RH front road wheel
- the engine protection plate situated under the R.H. front wheelarch
- the R.H. front mud shield

Drain :
- the gearbox
- the cooling system (see the relevant operation)

Remove :
- the R.H. drive shaft (see the relevant operation)
- the turbocharger (see the relevant operation)

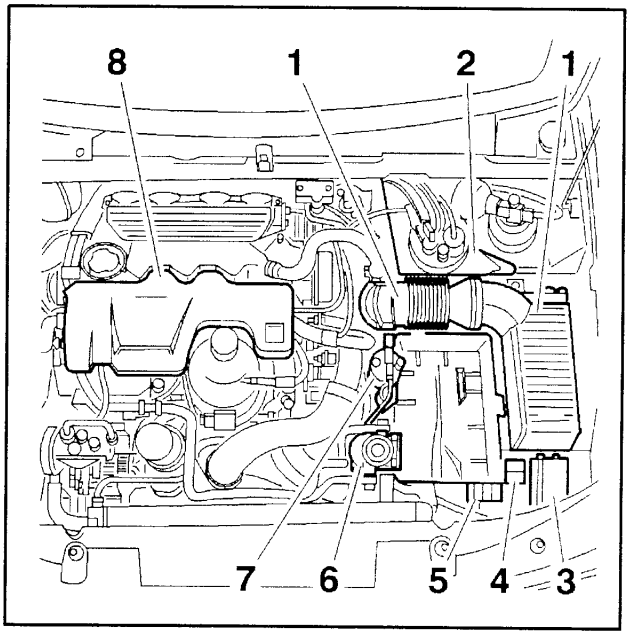

Fig : B1DP02GC

Remove :
- air filter (1) (together with its sleeve)
- the LHM fluid reservoir (2)

Fit the LHM reservoir/filter assembly cover.

Take out the fixing screws then push aside :
- fuse box (3)
- pre-heater control unit (5)
- diesel fuel priming pump (6)
- dehydrator reservoir (7)
- the battery tray

Unclip :
- the electrical harnesses from the battery tray
- fuse carrier boxes (4) from the cooling fans unit

Uncouple the bonnet opening cable.

Remove :
- the battery tray
- trim cover (6)
- the water pump drive belt (see the relevant operation)

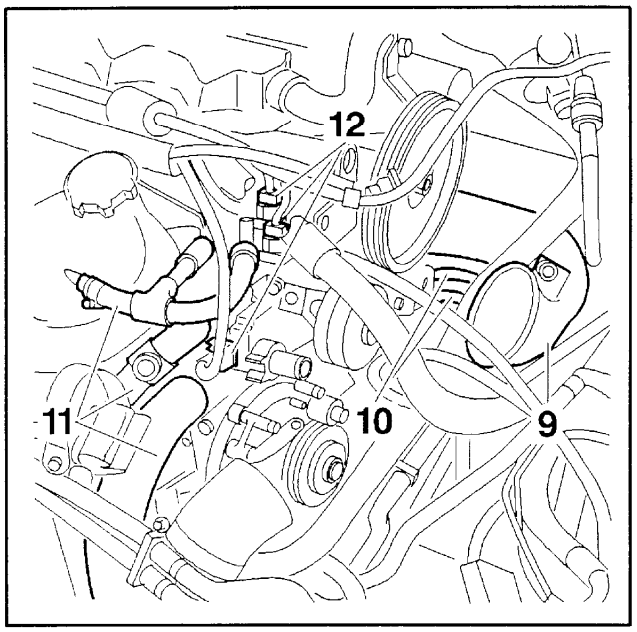

Fig : B1DP02HC

Remove sleeve (9).

Disconnect :
- the Diesel fuel inlet and return pipes (10) from the heater
- flexible hoses (11), utilising tool [1]
- connectors (12)

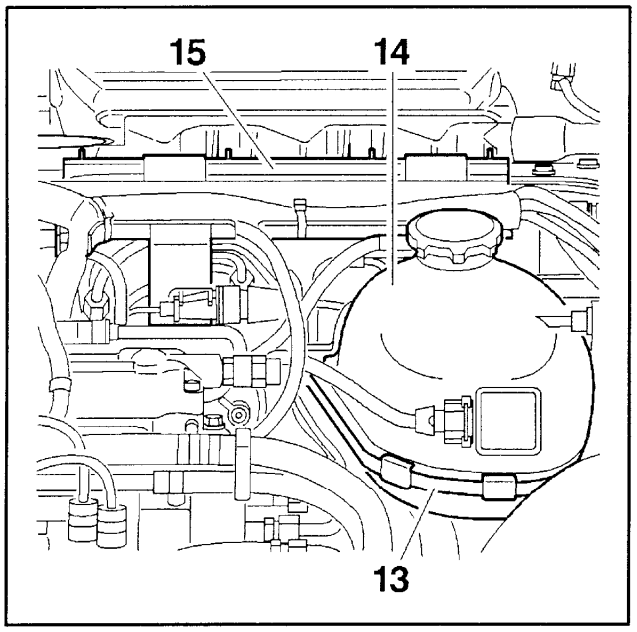

Fig : B1DP02IC

Take off clamping collar (13).

Disconnect the connection hose from the header tank, utilising tool [1].

Remove header tank (14).

Separate the wiring harnesses from the harness support (15).

Remove :
- wiring harness support (15)
- injector pipes

Disconnect :
- the injector return pipe
- the 2 heater plug feed pipes
- number 3 cylinder injector connector

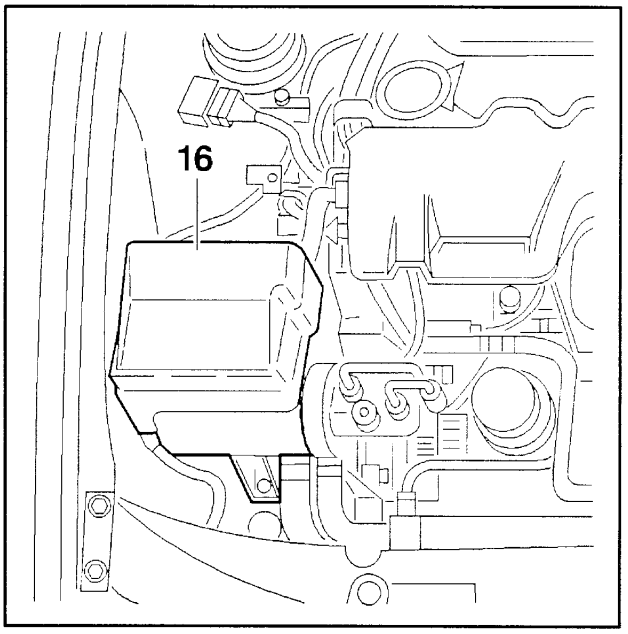

Fig : B1DP02JC

Withdraw the E.C.U.s from E.C.U. tray (16).

Remove E.C.U. tray (16).

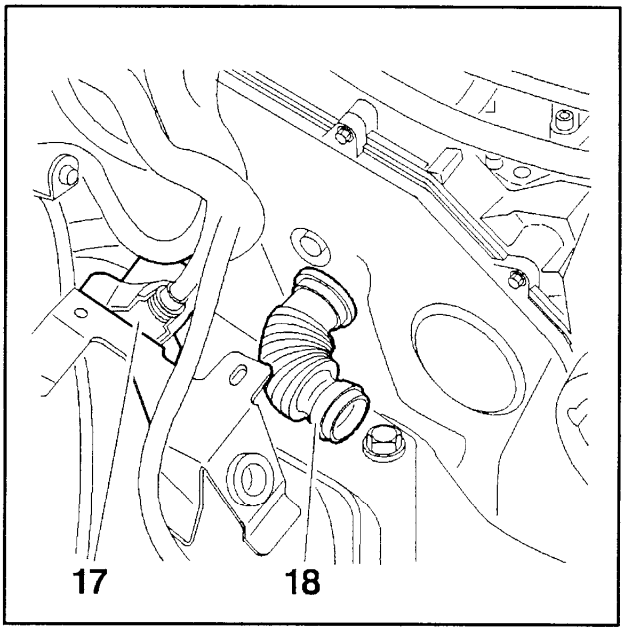

Fig : B1DP02KC

Remove :
- connector (17) trim cover
- connector (17) fixing screws

• sleeve (18) (rotate by 1/4 turn)

Unclip the electrical harnesses.

Remove the accessory drive belt (see the relevant operation).

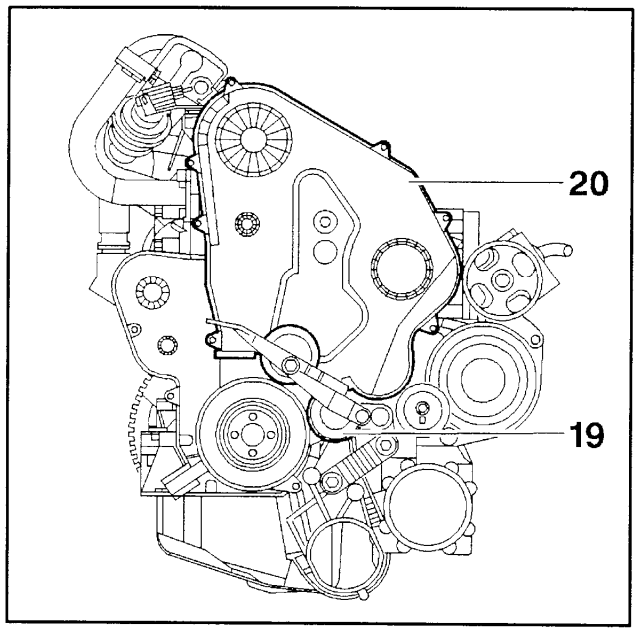

Fig : B1DP02LC

Remove :
- roller (19)
- upper timing cover (20)
- the timing belt (see the relevant operation)

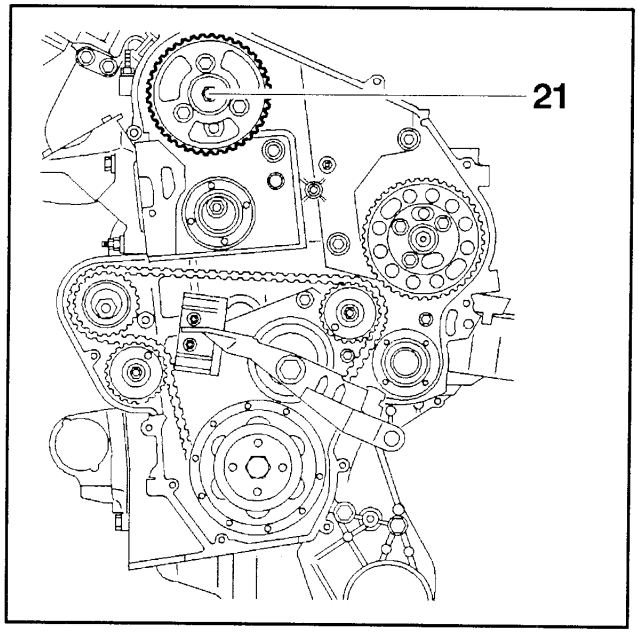

Fig : B1DP02MC

Remove camshaft gear wheel (21) (together with its fixing plate).

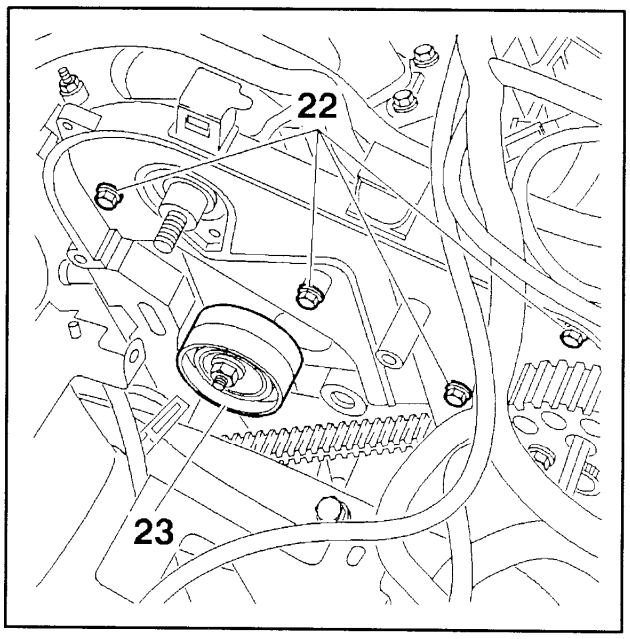

Fig : B1DP02NC

Remove :
- screws (22)
- roller tensioner (23)

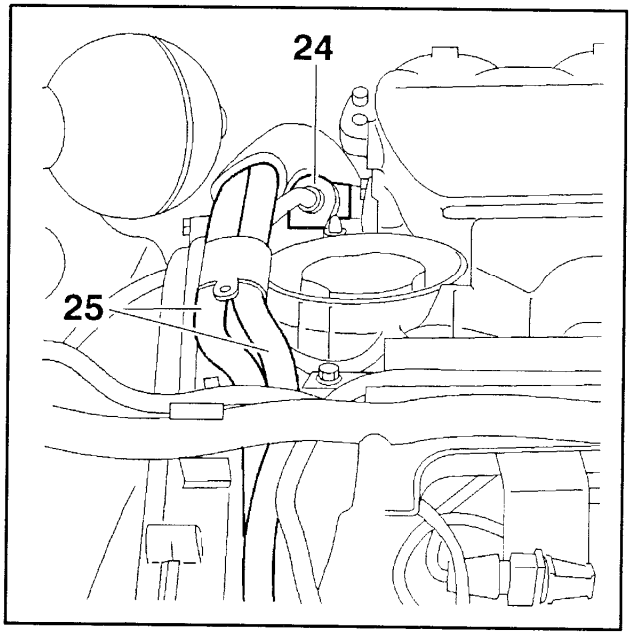

Fig : B1DP02PC

Remove electrovalve (24).

Unclip connecting hoses (25).

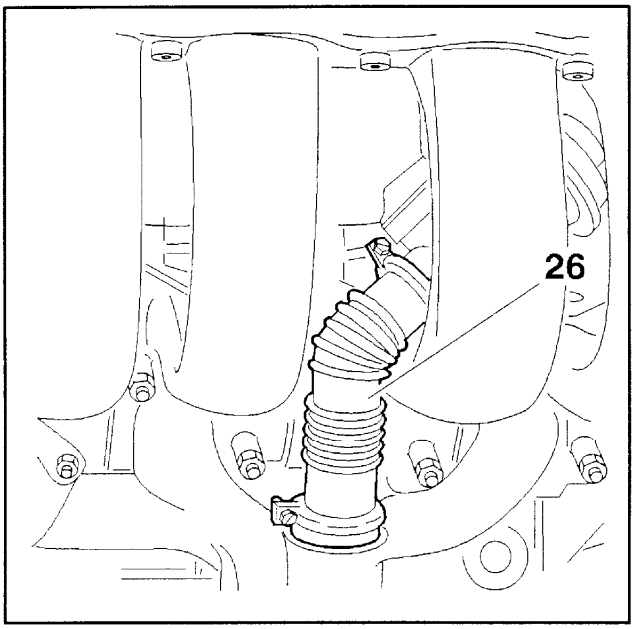

Fig : B1DP02QC

Disconnect metal sleeve (26).

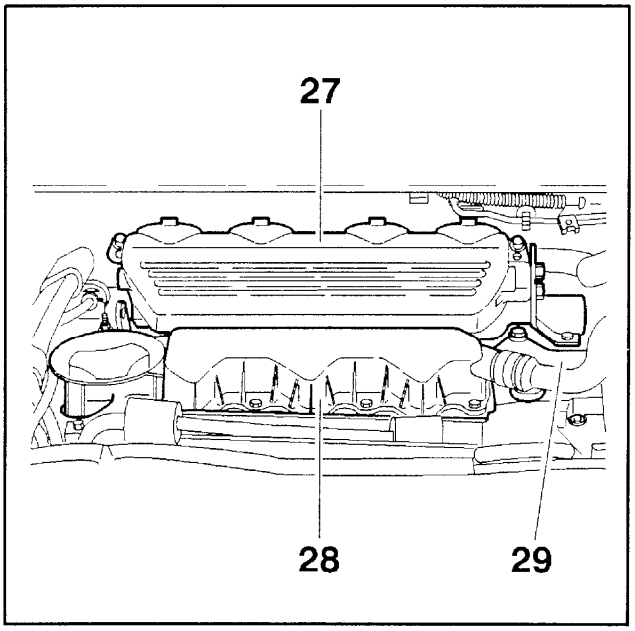

Fig : B1DP02RC

Remove :

- air reservoir (27) (together with its supports)
- the cylinder head cover (28)
- closing plate (29)

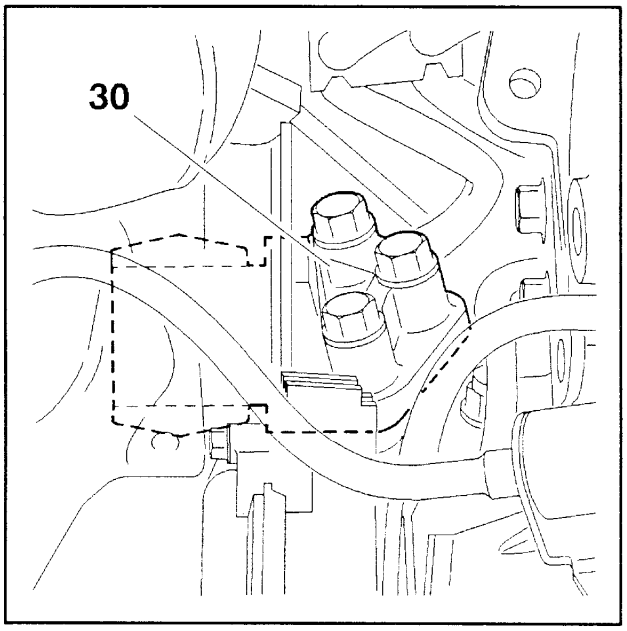

Fig : B1DP02SC

Remove :

- flexible retainer (30)
- the cylinder head bolts (22 screws)
- the cylinder head

3 - REFITTING

3.1 - Generality

Clean the joint faces (do not use a sharp or abrasive tool).

Check the flatness of the cylinderhead : maximum permissible bow = 0.03 mm.

Clean out the threads of the cylinder block head screws with a tap (10x150 and 12x150 taps).

Blow compressed air in the various threads of the cylinder block.

IMPERATIVE : It is necessary to check the length of the cylinderhead bolts before re-using them.

Use new screws if their lengths exceed :
- 162.5 mm (screw Ø10)
- 153.5 mm (screw Ø12)

Brush the threads of the cylinder head bolts.

Reinstall the cylinderhead screws with the threads and under heads previously coated with grease MOLYKOTE G RAPID.

3.2 - Cylinder head

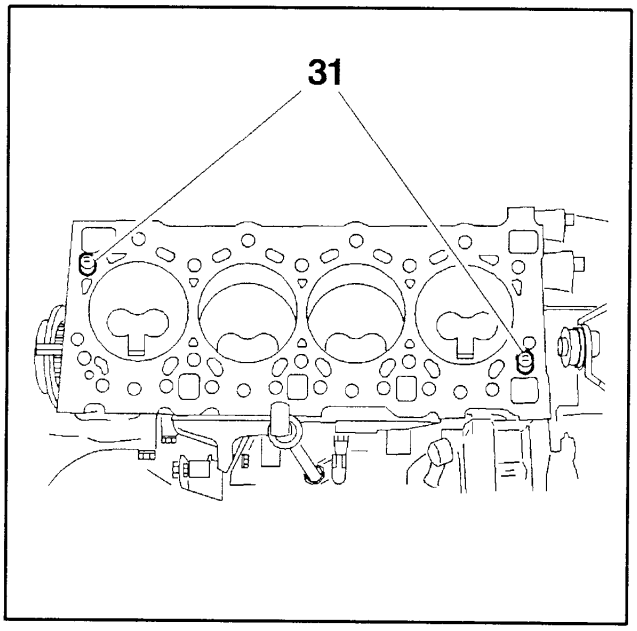

Fig : B1DP02TC

Check if dowels (31) are fitted.

Position :
- the cylinderhead gasket
- the cylinder head
- the cylinder head bolts

3.2.1 - Cylinder head tightening

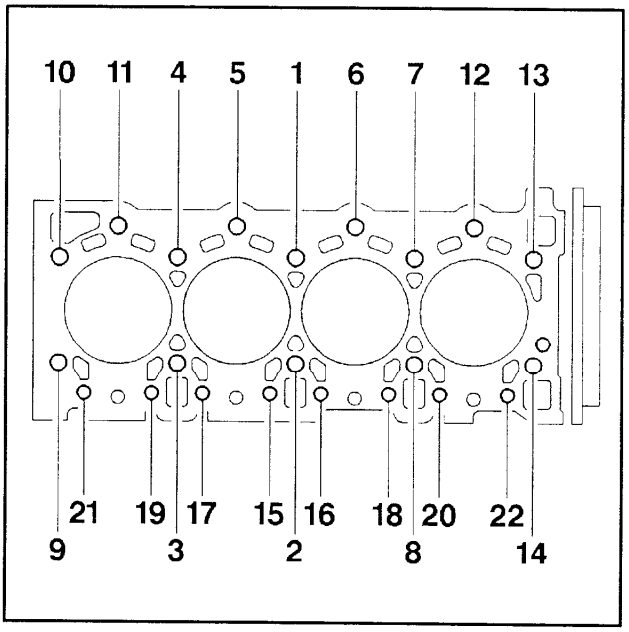

Fig : B1BP03XC

3.2.2 - First stage

Proceed bolt by bolt in the order shown (1 to 14).

Tightening torque of bolts (Ø12) : 5 m.daN.

Proceed bolt by bolt in the order shown (15 to 22).

Tightening torque of bolts (Ø10) : 3.5 m.daN.

3.2.3 - Second stage

Proceed bolt by bolt in the order shown (1 to 22).

Angular tightening of 120° ; tolerance : ± 5°.

NOTE : It is not necessary to retighten the cylinderhead after the engine warming up.

3.2.4 - Refitting (continued)

Fit :
- flexible retainer (30) ; tightening torque = 5 m.daN
- closing plate (29) ; tightening torque = 1.5 m.daN
- the cylinder head cover (28) ; tightening torque = 0.8 m.daN
- air reservoir (27) ; tightening torque = 0.8 m.daN

Reconnect metal sleeve (26).

Clip connecting hoses (25) in place.

Relocate :
- electrovalve (24)
- roller tensioner (23)
- screws (22)
- the camshaft gear wheel (together with its fixing plate) ; tightening torque = 4.3 m.daN
- the timing belt (see the relevant operation)

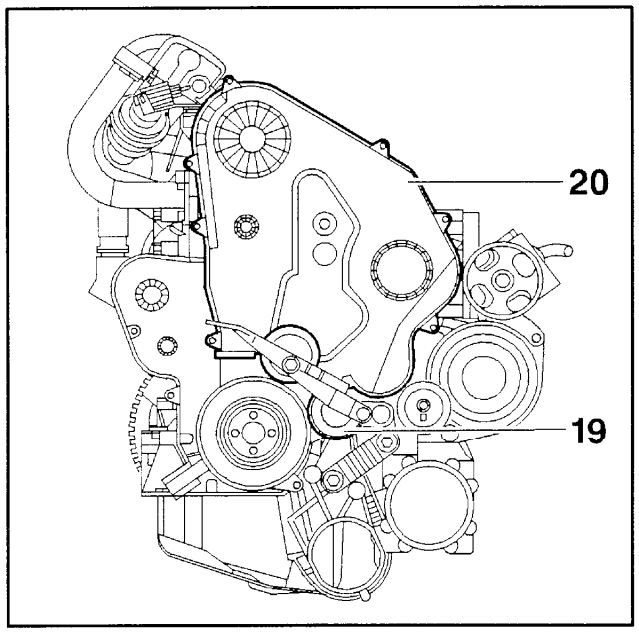

Fig : B1DP02LC

Refit :
- upper timing cover (20)
- roller (19)
- the auxiliary equipment drive belt (see the relevant operation)

Clip the electrical harnesses back.

Reinstall :
- sleeve (18) (rotate by 1/4 turn)
- connector (17)
- connector (17) trim cover
- E.C.U. tray (16)
- the E.C.U.s

Reconnect :
- the 2 heater plug feed pipes
- number 3 cylinder injector connector
- the injector return pipe

Relocate :
- injector pipes
- wiring harness support (15)
- clip the electrical harnesses to the harness support (15)

Reconnect the connecting hose to the header tank, utilising tool [1].

Fit :
- header tank (14)
- clamping collar (13)

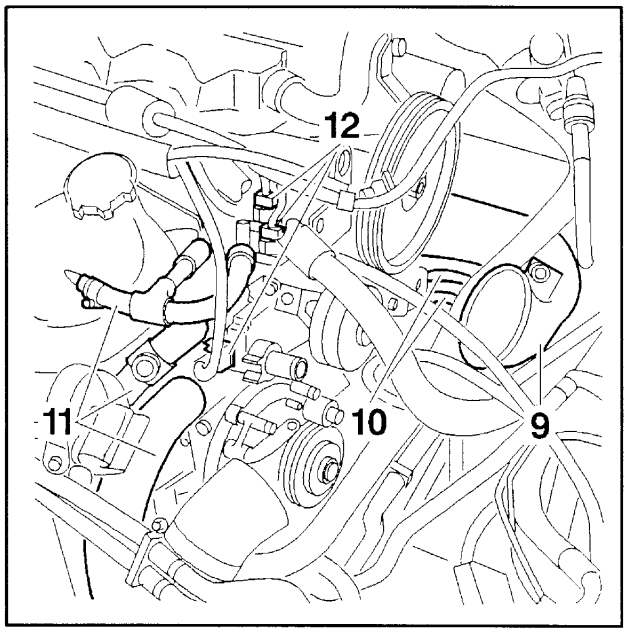

Fig : B1DP02HC

Reconnect :
- flexible hoses (11) ; use tools [1]
- connectors (12)
- the Diesel fuel inlet and return pipes (10) from the heater

Refit :
- sleeve (9)
- the water pump drive belt (see the relevant operation)
- trim cover (8)
- the battery tray

Couple up the bonnet release cable.

Clip in place :
- the wiring harnesses to the battery tray
- fuse box (4)

Relocate :
- the dehydrator reservoir
- diesel fuel priming pump (6)
- pre-heater control unit (5)
- fuse box (3)
- the LHM fluid reservoir (2)
- air filter (1) (together with its sleeve)
- the turbocharger (see the relevant operation)
- the R.H. drive shaft (see the relevant operation)

Refill the gearbox with oil and top up to level.

Reinstall :
- the R.H. front mud shield
- the engine protection plate situated under the R.H. front wheelarch
- the RH front road wheel
- the protective plate under the engine
- the battery

Clip in place the battery trim cover.

Return the vehicle to its wheels.

Fill and bleed the cooling system (see the relevant operation).

REMOVING – REFITTING THE CAMSHAFT

1 – RECOMMENDED TOOLS

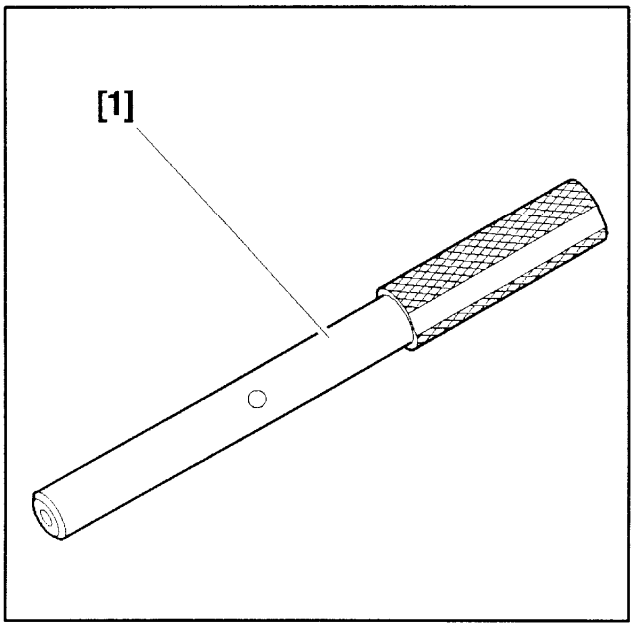

Fig : E5-P05XC

[1] camshaft gear wheel setting rod 5711-TA (tool box 5711-T).

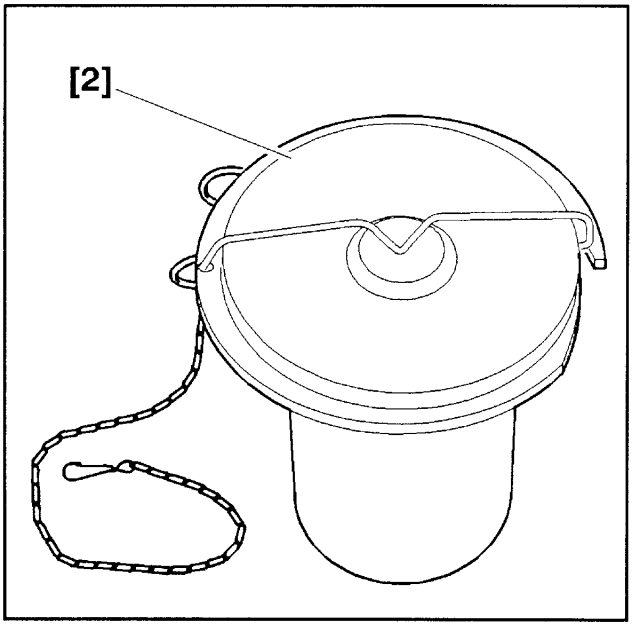

Fig : E5-P05YC

[2] LHM reservoir/filter assembly cover 9004-T.

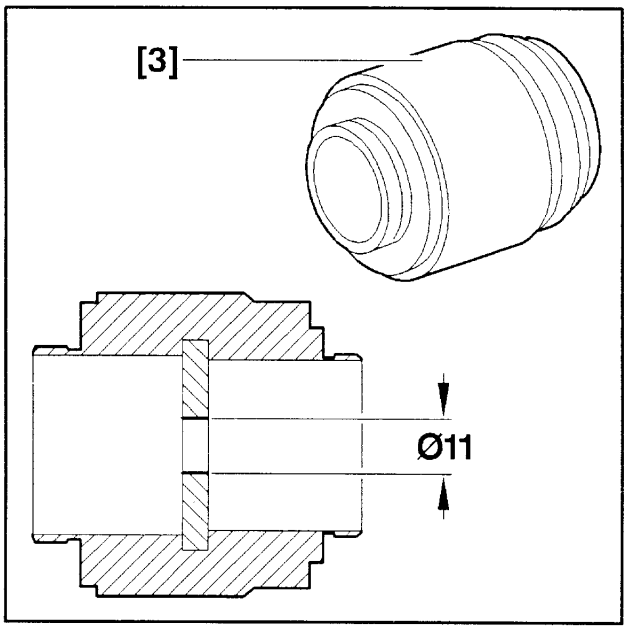

Fig : E5-P05ZC

[3] seal fitting drift – camshaft 5711-TF (tool box 5711-T).

Additional tools :

- setting rod 5711-TQ (tool box 5711-T)
- spanner 5711-TR (tool box 5711-T)
- tensioning spanner 5711-TS (tool box 5711-T)
- flywheel setting rod 7014-TJ (tool box 7004-T)
- injection pump setting rod 5711-TB (tool box 5711-T)
- belt tension measuring instrument : 4099-T or 4122-T

2 - REMOVAL

Lift and support the vehicle with the front wheels suspended.

Unclip the battery trim cover :
- 2 attachment points, front side end
- 1 attachment point marked by an arrow towards the air filter (using a screwdriver)

Remove :
- the battery
- the protective plate under the engine
- the RH front road wheel
- the engine protection plate situated under the R.H. front wheelarch
- the R.H. front mud shield

Drain the cooling system (see the relevant operation).

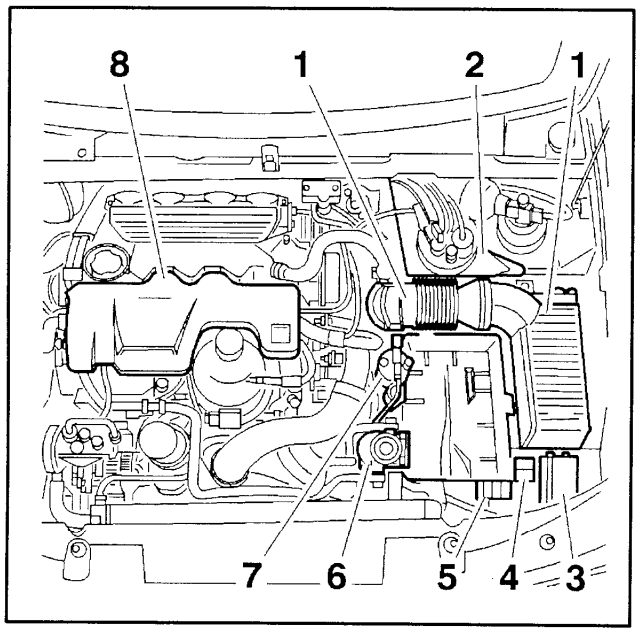

Fig : B1DP02GC

Remove :
- air filter (1) (together with its sleeve)
- the LHM fluid reservoir (2)

Locate the LHM reservoir/filter assembly cover [2].

Take out the fixing screws then push aside :
- fuse box (3)
- pre-heater control unit (5)
- diesel fuel priming pump (6)
- the dehydrator reservoir (7)
- the battery tray

Unclip :
- the electrical harnesses from the battery tray
- fuse carrier boxes (4) from the cooling fans unit

Uncouple the bonnet opening cable.

Remove :
- trim cover (8)
- the water pump drive belt (see the relevant operation)
- the camshaft pulley

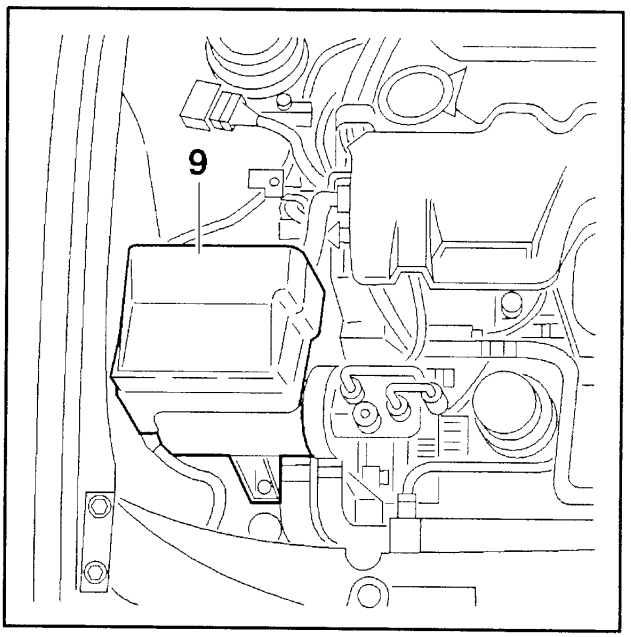

Fig : B1DP02VC

Withdraw the E.C.U.s from E.C.U. tray (9).

Remove E.C.U. tray (9).

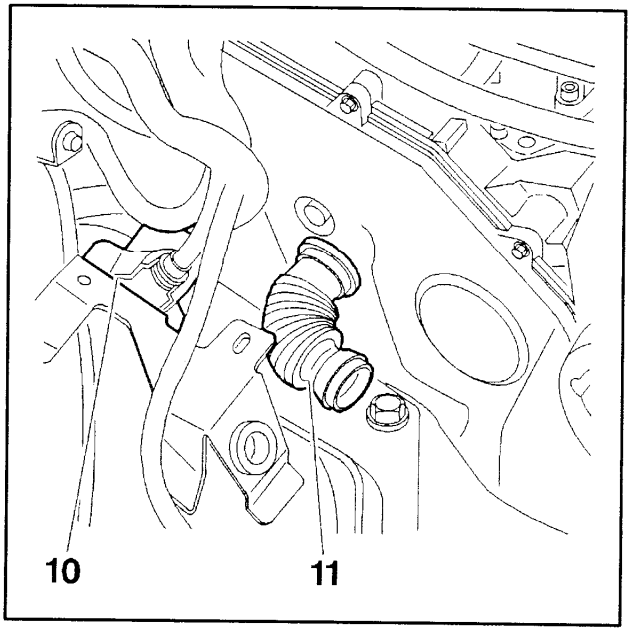

Fig : B1DP02WC

Remove :
- connector (10) trim cover
- connector (10) fixing screws
- sleeve (11) (rotate by 1/4 turn)

Unclip the electrical harnesses.

Remove the accessory drive belt (see the relevant operation).

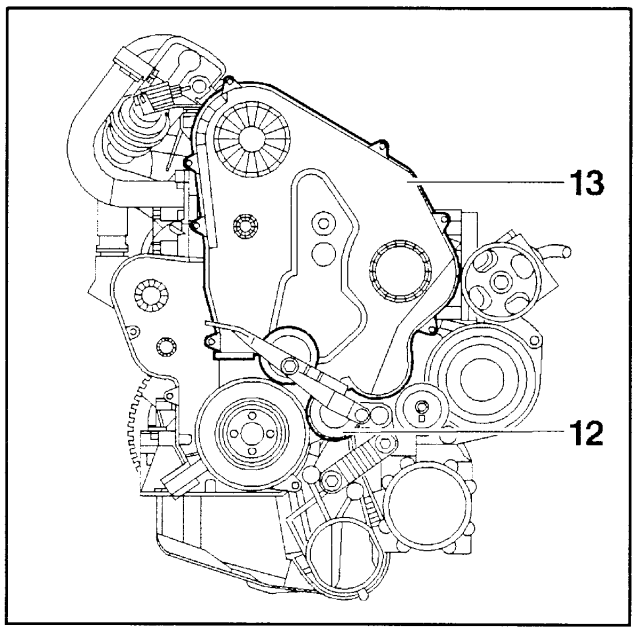

Fig : B1DP02XC

Remove :
- roller (12)
- upper timing cover (13)
- the timing belt : carry out a partial removal operation (see the relevant operation)

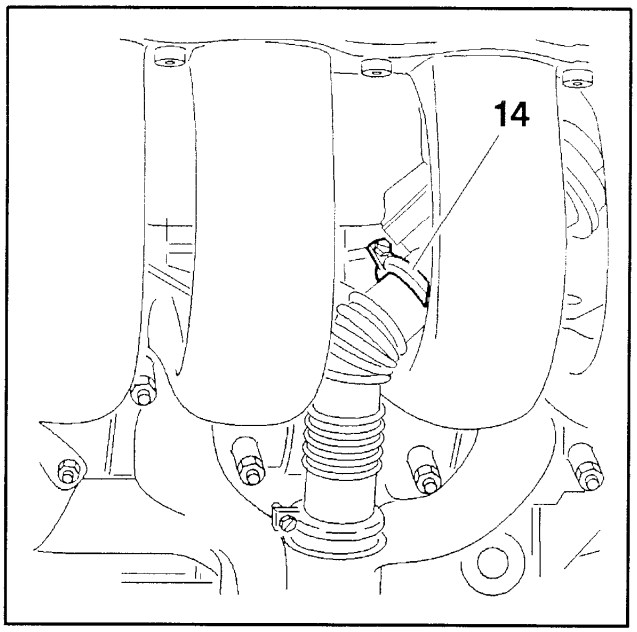

Fig : B1DP02YC

Take off clamping collar (14).

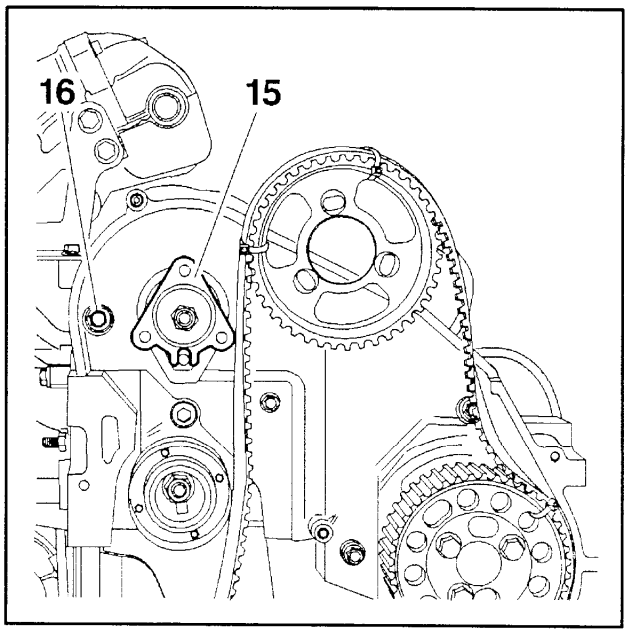

Fig : B1DP02ZC

Remove :
- camshaft plate (15)
- screw (16)

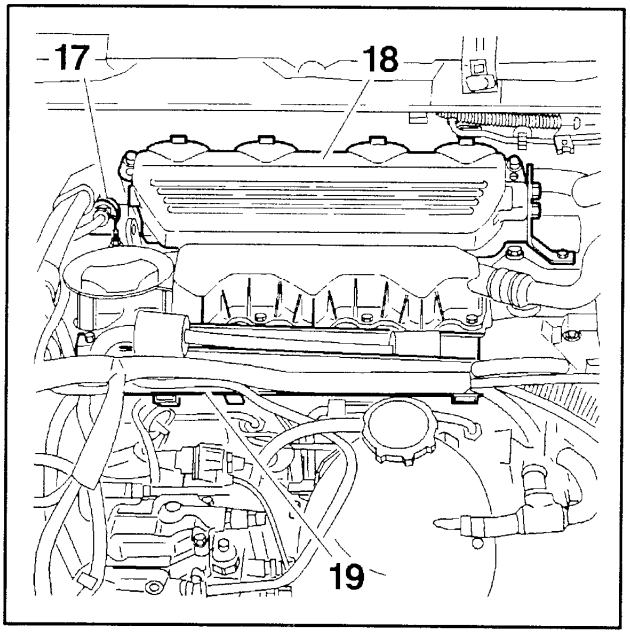

Fig : B1DP030C

Remove :
- electrovalve (17)
- air reservoir (18) (together with its supports)
- mounting bracket (19)

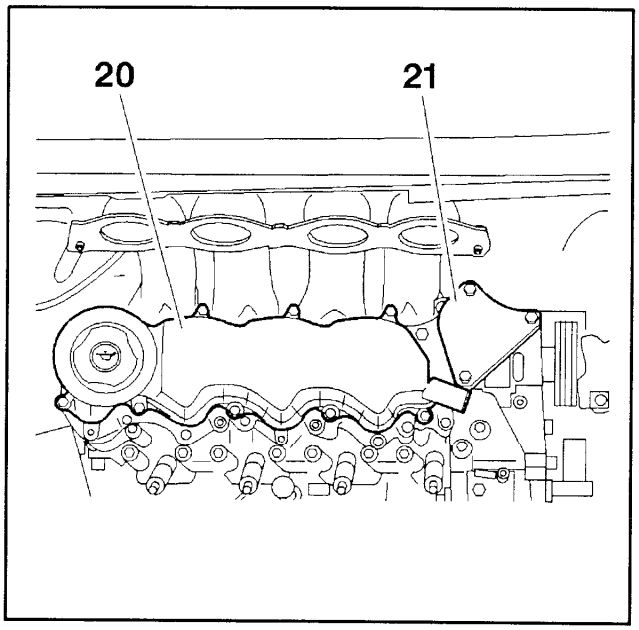

Fig : B1DP031C

Remove :
- the cylinder head cover (20)
- closing plate (21)

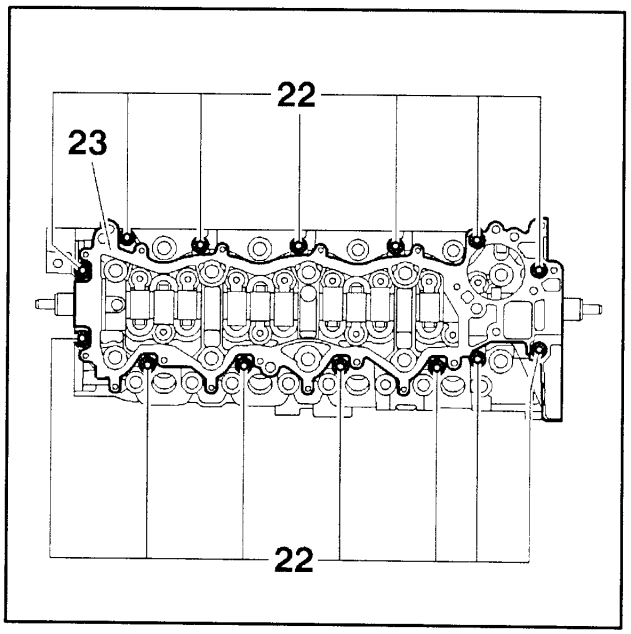

Fig : B1DP032C

Remove :
- screws (22)
- camshaft carrier bearing (23)

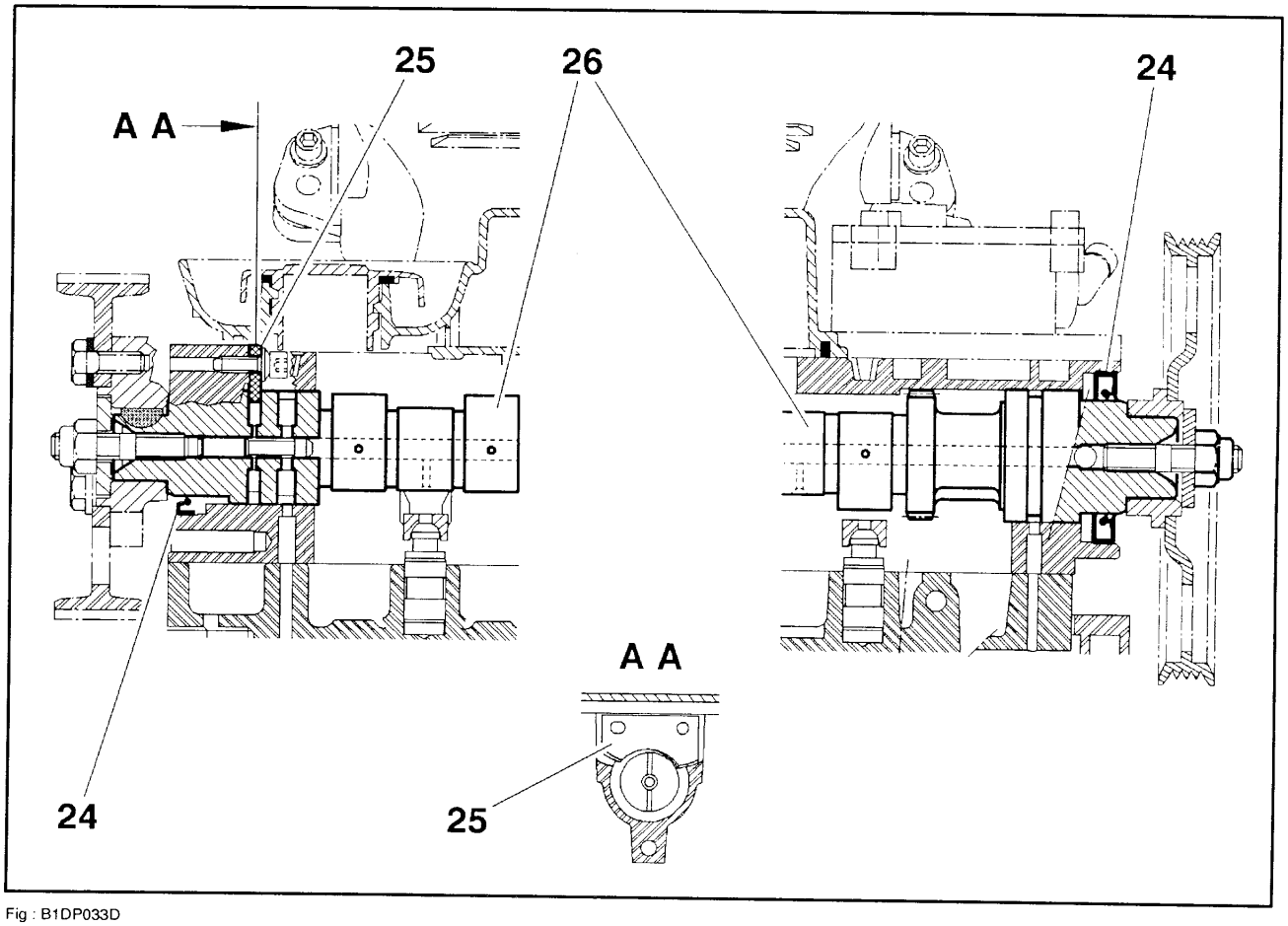

Fig : B1DP033D

Remove :
- lipped seals (24)
- flange (25)
- camshaft (26)

3 – REFITTING

Clean the joint faces.

Do not use abrasives or sharp tools on the joint faces.

Check the condition of the hydraulic push-rods.

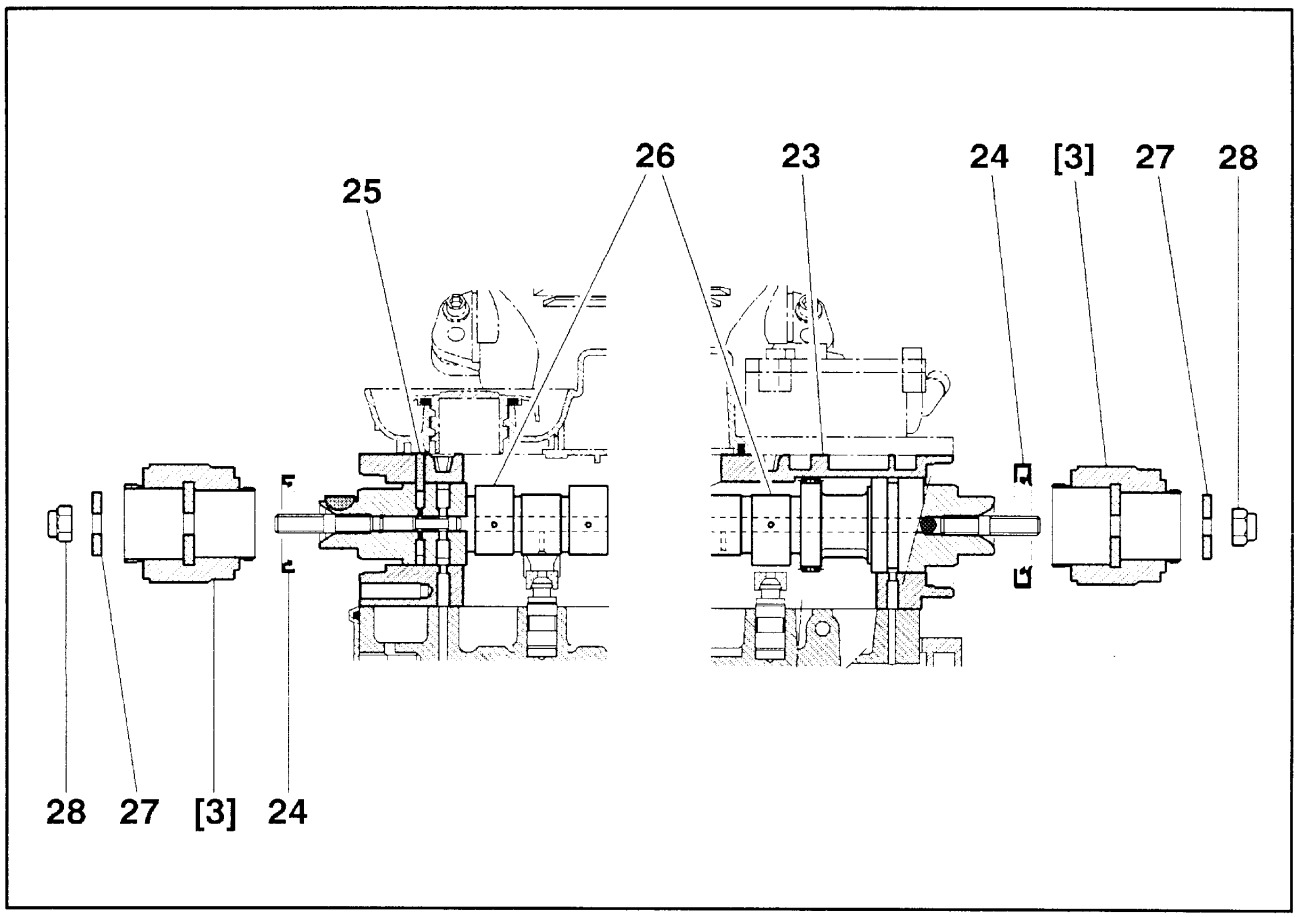

Fig : B1DP034D

Lubricate the camshaft with new engine oil.

Refit :
- camshaft (26) into camshaft carrier bearing (23)
- flange (25) ; tighten to 1,15 m.daN
  use new screws (pre-coated).

Oil the new lipped seals (24).

Put lipped seal [24] into place with tool (3).

Position :
- washer (27)
- nut (28)

Tighten nut (28) and stop when lipped seal (24) is located.

Remove :
- nut (28)
- washer (27)
- tool [3]

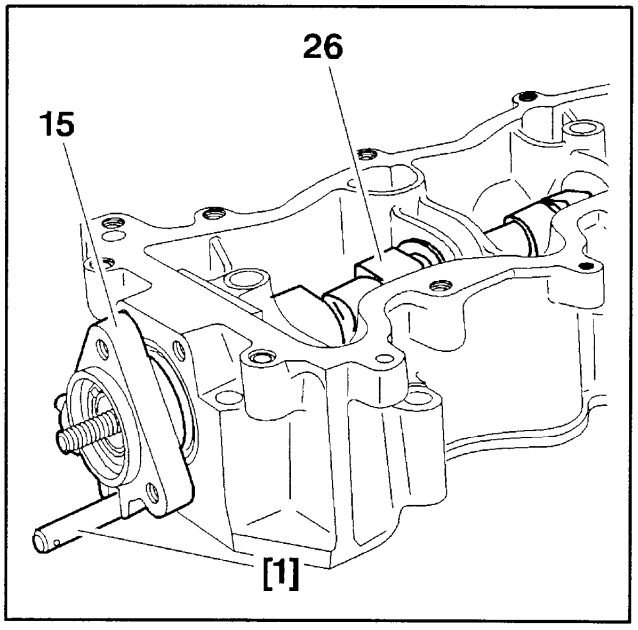

Fig : B1DP035C

Refit the camshaft plate (15).

Peg the camshaft with setting rod [1].

IMPERATIVE : Do not rotate camshaft (26) as the valves may be damaged when fitting the camshaft bearing to the cylinderhead.

Remove :
- tool [1]
- camshaft plate (15)

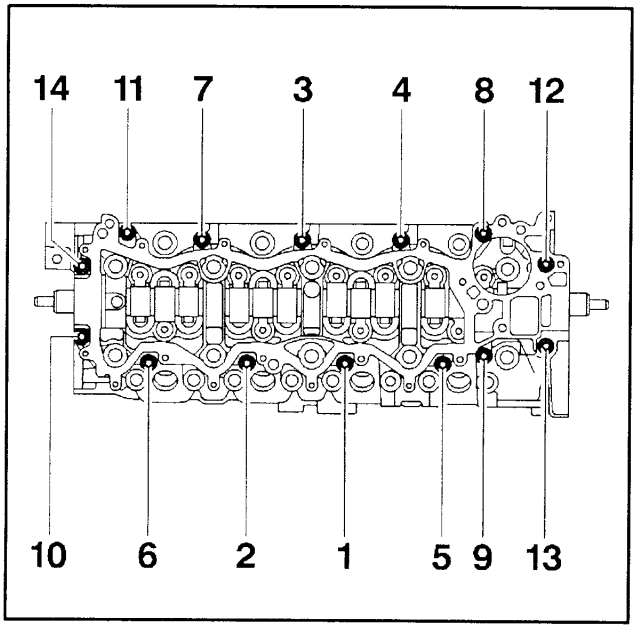

Fig : B1DP01JC

Smear the upper contact face of the cylinderhead with sealing product (E10).

Relocate :
- camshaft carrier bearing (23) (to the cylinderhead)
- screws (22) ; tighten to 2 m.daN, observing the correct tightening order : 1–14
- closing plate (21) ; tighten to 1.5 m.daN
- the cylinder head cover (20) ; tighten to 0.8 m.daN
- air reservoir (18) (together with its supports) (see operation : removing–refitting the EGR valve)
- electrovalve (17)
- mounting bracket (19)
- screw (16)
- camshaft plate (15) (new nut) ; tighten to 4.3 m.daN
- the timing belt : refit partly (see the relevant operation)
- upper timing cover (13)
- roller (12)
- sleeve (11) (rotate by 1/4 turn)
- connector (10)
- connector (10) trim cover

Clip the electrical harnesses back.

Install :
- the auxiliary equipment drive belt (see the relevant operation)
- E.C.U. tray (9)
- the E.C.U.s

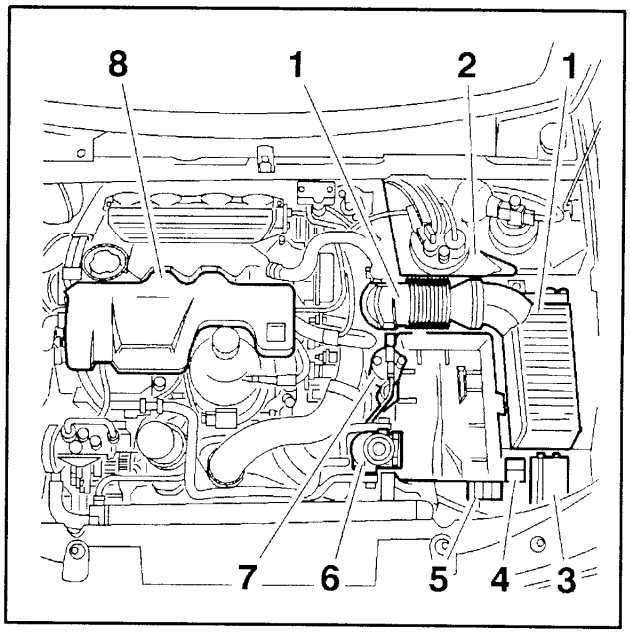

Fig : B1DP02GC

Fit :
- the camshaft pulley (new nut) ; tighten to 4.3 m.daN
- the water pump drive belt (see the relevant operation)
- trim cover (8)

Clip in place :
- the wiring harnesses to the battery tray
- fuse carrier boxes (4) from the cooling fans unit

Locate :
- the battery tray
- the bonnet release cable
- the dehydrator reservoir (7)
- diesel fuel priming pump (6)
- pre-heater control unit (5)
- fuse box (3)
- the LHM fluid reservoir (2)
- air filter (1)
- the R.H. front mud shield
- the engine protection plate situated under the R.H. front wheelarch
- the RH front road wheel
- the protective plate under the engine
- the battery

Clip in place the battery trim cover.

Return the vehicle to its wheels.

Fill and bleed the cooling system (see the relevant operation).